भारत सरकार/GOVERNMENT OF INDIA

अंतरिक्ष विभाग/DEPARTMENT OF SPACE

विक्रम साराभाई अंतरिक्ष केंद्र/VIKRAM SARABHAI SPACE CENTRE

तिरुवनंतपुरम/THIRUVANANTHAPURAM – 695 022

विज्ञा. सं. वीएसएससी/पी/विज्ञा./294/2019 दि. DT. 06.01.2020
ADVT. NO. VSSC/P/ADVT/294/2019 DT. 06.01.2020

भारत के राष्ट्रपति के लिए तथा उनकी ओर से, वरिष्ठ प्रधान, क्रय एवं भंडार, विक्रम साराभाई अंतरिक्ष केंद्र (वीएसएससी), तिरुवनंतपुरम निम्नलिखित के लिए (क्रम सं. 1 से 4 तक) मोहरबंद निविदाएं तथा (क्रम सं. 5 और 6 के लिए) ई-प्रापण के माध्यम से निविदाएं आमंत्रित करता है।

For & on behalf of the President of India, the Sr. Head Purchase & Stores, Vikram Sarabhai Space Centre (VSSC), Thiruvananthapuram invites Sealed Tenders **(for Sl. No. 1 to 4)** and Tenders **through e-procurement (for Sl. No. 5 and 6)** for the following :-

क्रम सं. Sl. No	निविदा सं. Tender No.	वर्णन / Description	मात्रा Qty.	निविदा शुल्क Tender Fee
01.	40D1-2019-4336-01 **[एकल भाग / SINGLE PART]**	उच्च ऊर्जा यूपीएस प्रणालियों की एएमसी के लिए दर संविदा Rate Contract for AMC of high power UPS systems (मेक/Make : न्यूमरिक, एपीसी, पावरवन/Numeric, APC, Powerone)	1 लॉट/Lot	रु. 560/- प्रति निविदा / per Tender
02.	A54B-2019-2595-01 **[दो भाग / TWO PART]**	इयुअल कैविटी ब्लैक बोडी एपारटस की आपूर्ति, संस्थापन तथा कमीशनिंग Supply, Installation and Commissioning of Dual Cavity Black Body Apparatus	1 सेट/Set	
03.	A510-2019-5333-01 **[एकल भाग / SINGLE PART]**	जैव-गैस संयंत्रों की आपूर्ति, संस्थापन तथा कमीशनिंग Supply, Installation & Commissioning of Bio-Gas Plants	2 सं./No.	
04.	4554-2019-5294-01 **[दो भाग / TWO PART]**	स्वचालित पराश्रव्य सी-स्कैन प्रणाली Automated Ultrasonic C-Scan System	1 सं./No.	
	नोट:- विनिर्देशन तथा विस्तृत निबंधन एवं शर्तें निविदा दस्तावेज़ के अनुसार Note :- Specification and detailed terms & conditions as per Tender document			

05.	VSSC/AVN-PUR/2019E1802201 **[दो भाग / TWO PART]**	फौरियर ट्रांसफॉर्म इन्फ्रारेड (एफटीआइआर) स्पेक्ट्रोमीटर Fourier Transform Infrared (FTIR) Spectrometer	1 सं./No.	लागू नहीं / NA
06.	VSSC/AVN-PUR/2019E1868401 **[एकल भाग / SINGLE PART]**	अम्लों तथा क्षारों के लिए ड्रम पंपों की आपूर्ति Supply of drum pumps for acids and alkalies	6 सं./No.	

निविदा प्रारूप जारी करने की अंतिम तिथि **Last Date for issue of Tender Forms (Sl. No. 1, 3 & 4)** **(Sl. No. 2)**	दिनांक **03/02/2020** को **16:00** बजे तक **03/02/2020 up to 16:00 Hrs.** दिनांक **24/02/2020** को **16:00** बजे तक **24/02/2020 up to 16:00 Hrs.**
निविदा प्राप् करने की अंतिम तिथि **Due Date for Receipt of Tender (Sl. No. 1, 3 & 4)** **(Sl. No. 2)**	दिनांक **04/02/2020** को **16:00** बजे तक **04/02/2020 up to 16:00 Hrs.** दिनांक **25/02/2020** को **16:00** बजे तक **25/02/2020 up to 16:00 Hrs.**
निविदा खोलने की तिथि **Tender Opening Date (Sl. No. 1, 3 & 4)** **(Sl. No. 2)**	दिनांक **05/02/2020** को **10:00** बजे **05/02/2020 at 10:00 Hrs.** दिनांक **26/02/2020** को **10:00** बजे **26/02/2020 at 10:00 Hrs.**

Sl. No.	निविदा प्रारूपों को डाउनलोड करने की समय-सीमा **Time limit for download of Tender Forms**	बोली प्रस्तुत करने की समय-सीमा **Time limit for submission of Bid**	बोली खोलने की तिथि **Bid Opening date**
05.	**Upto 21.02.2020 [14:00 Hrs.]**	**Upto 21.02.2020 [14:00 Hrs.]**	**03.03.2020 [14:05 Hrs.]**
06.	**Upto 17.01.2020 [11:00 Hrs.]**	**Upto 17.01.2020 [11:00 Hrs.]**	**21.01.2020 [11:00 Hrs.]**

क्रम सं. 05 और 06 के लिए, विवरण ई-प्रापण पोर्टल **http://eprocure.isro.gov.in** पर उपलब्ध है।
For Sl. No. 05 and 06, details are available on ISRO e-procurement portal **http://eprocure.isro.gov.in**.

शुद्धिपत्र, यदि कोई हो तो, हमारे वेबसाइट www.vssc.gov.in / www.isro.gov.in में मात्र प्रकाशित किया जाएगा।
Corrigendum, if any will be published in our websites : www.vssc.gov.in / www.isro.gov.in only.

हस्ताक्षरित/Sd/-

वरि. प्रधान, क्रय एवं भंडार / Sr. Head, Purchase & Stores

Note :-

1. Full details and specification of the item and general instructions to be followed regarding submission of tender is indicated in the tender document.

2. Tender Documents can be downloaded from our websites and also be obtained from the following address on request and submission of tender fee :

   For Sl. No. 1 : Sr. Purchase & Stores Officer, Main Purchase, Purchase Unit-I, RFF Area, VSSC, ISRO PO, Thiruvananthapuram – 695 022, Ph : 0471-256 3139 / 3522.
   For Sl. No. 2 & 3 : Sr. Purchase & Stores Officer, SPRE Purchase, Purchase Unit-III, RFF Area, VSSC, ISRO PO, Thiruvananthapuram – 695 022, Ph : 0471-256 3775 / 3609.
   For Sl. No. 4 : Purchase & Stores Officer, CMSE Purchase, Vattiyoorkavu PO, Thiruvananthapuram – 695 013, Ph : 0471-256 9290 / 9289.

   While requesting for Tender Documents please indicate on the envelope as "Request for Tender Documents- Tender No…….. dt……".

3. Tender Fee (Rs. 560/- per tender) shall be paid in the form of CROSSED DEMAND DRAFT ONLY. Other mode of payment is not acceptable. **The Demand Draft should be in favour of : Sr. Accounts Officer, Centre Accounts, VSSC (For Sl. No. 1, 2 & 3) payable at State Bank of India, Thumba, Thiruvananthapuram and Accounts Officer, CMSE Accounts (For Sl. No. 4) payable at State Bank of India, Nettayam Branch, Thiruvananthapuram** [The tender fee is NON-REFUNDABLE].

   Government Departments, PSUs (both Central and State), Small Scale Industries units borne in the list of NSIC and foreign sources are exempted from submission of tender fee. Those who are coming under the above category should submit documentary evidence for the same.

4. While submitting your offer, the envelope shall be clearly superscribed with Tender No. and Due Date and to be sent to the following address.

   For Sl. No. 1 : Sr. Purchase & Stores Officer, Main Purchase, Purchase Unit-I, RFF Area, VSSC, ISRO PO, Thiruvananthapuram – 695 022, Ph : 0471-256 3139 / 3522.
   For Sl. No. 2 & 3 : Sr. Purchase & Stores Officer, SPRE Purchase, Purchase Unit-III, RFF Area, VSSC, ISRO PO, Thiruvananthapuram – 695 022, Ph : 0471-256 3775 / 3609.
   For Sl. No. 4 : Purchase & Stores Officer, CMSE Purchase, Vattiyoorkavu PO, Thiruvananthapuram – 695 013, Ph : 0471-256 9290 / 9289.

5. Quotations received after the Due Date/Time will not be considered.

6. VSSC, Thiruvananthapuram is not responsible for any postal delay/loss of documents in transit.

7. Sr. Head, Purchase & Stores, VSSC, Thiruvananthapuram reserves the right to accept or reject any/or all the tenders in part or full without assigning any reasons thereof.

GOVERNMENT OF INDIA
DEPARTMENT OF SPACE
VIKRAM SARABHAI SPACE CENTRE
PURCHASE UNIT-I,MAIN PURCHASE,RFF AREA
THIRUVANANTHAPURAM 695022
KERALA, INDIA

Ph No: 0471-2563139,3676,3522,3523
Fax 0471-2705092 / 2562065
Email: spso_psd@vssc.gov.in

Date :31/12/2019

INVITATION TO TENDER

Our Ref No : 40D1 **2019-004336-01**

M/s 000000

Tender Due: [illegible] **Hrs ISTon** [illegible]

Opening : [illegible] **Hrs ISTon** [illegible]

Dear Sirs,

Please submit your sealed quotation , in the Tender Form enclosed here along with the descriptive catalogues / pamphlets /literature ,superscribed with Our Ref.No. and Due Date for the supply of the following items as per the terms & conditions mentioned in Annexure(Form No: AS PER ANNEXURE)

S.No.	Description of Items with Specifications	Unit	Quantity
1	Rate Contract for AMC of high power UPS Systems (Make: NUMERIC, APC, POWERONE)	Lot	1
2	Rate fixed under this rate Contract shall be valid for 2 years from the date of release of PO		
3	Party may quote only for the brands for which they are authorised and capable to maintain.		
4	Details as per Annexure 1		
5	Terms & Conditions as per Annexure 2		

DELIVERY AT: VSSC, TRIVANDRUM

MODE OF DESPATCH ON SITE

DUTY EXEMPTIONS NIL

SPECIAL INSTRUCTIONS AS PER ANNEXURE

SPECIFIC TERMS AS PER ANNEXURE

For and on behalf of the President of India
The Purchaser

Annexure1

Fixation of rate – AMC of UPS System reg....

- Offers are invited for placing order for **fixing the rate for the Comprehensive AMC of high power UPS Systems** of following makes and models. The available known models are listed in the column no 4. Quatation may be submitted for other models also if, already supplied to VSSC.
- Please provide rate against respective models.
- Unsupported models if any are to be mentioned in the remarks.
- If the mandatory replacement of capacitors/ inductors as recommended by the manufacturer happens to be during the AMC period, clarify whether this expense is included in the quoted amount. Else mention the cost of replacement separately.

Sl No	Make	Capacity	Existing Model/New Model	Rate offered for AMC	Remarks
1	APC	15KVA	SURT 15KUXIQ	Provide rate here	
	APC	20KVA	MGE Galaxy 3500	Provide rate here	
	APC	60KVA	MGE GALAXY 5500	Provide rate here	
	APC	Provide other capacity here	Provide new model here	Provide rate here	
	APC	Provide other capacity here	Provide new model here	Provide rate here	
2	Numeric	15KVA	HP MAX	Provide rate here	
	Numeric	15KVA	3PH-1PH	Provide rate here	
	Numeric	Provide other capacity here	Provide new model here	Provide rate here	
	Numeric	Provide other capacity here	Provide new model here	Provide rate here	
3	Powerone	20KVA	PMP203R32	Provide rate here	
	Powerone	40KVA	PMP403R32	Provide rate here	
	Powerone	Provide other capacity here	Provide new model here	Provide rate here	
	Powerone	Provide other capacity here	Provide new model here	Provide rate here	

ANNEXURE-II

Fixation of Rates for AMC of UPS systems installed at VSSC/ IISU

TERMS AND CONDITIONS

1. **Purpose: Rate contract for comprehensive AMC of high power UPS systems (Make: APC, NUMERIC, POWERONE, DYNAMIT) in VSSC/IISU.**
2. **Mode of operation**: The personnel deputed should be made available in all working days and holidays as and when required, for attending any number of breakdown calls at various user locations in VSSC including Vattiyoorkavu and Valiamala. Normal working hours are from 9.00 AM to 5.00 PM - Monday through Friday, Breakdown calls shall be attended within 2 working days of intimation by the focal point/his office.
   Repairs should include replacement of defective parts with original spare parts and upgrading or restoring the software or firmware as applicable. Technicians have to take up and complete maintenance jobs as per the information sent through phone or e-mail.
3. This contract is meant to be operated as Comprehensive AMC.
4. Replacement of UPS battery will not be under the scope of this AMC. (*Battery will be provided by VSSC, installation & wiring has to be done by the AMC Provider)*
5. Four preventive maintenance of the system and battery is mandatory. Preventive maintenance of Battery is to be done as per VSSC standards.
6. The input & output capacitors shall be thoroughly checked and any degraded capacitors should be changed immediately. All the input & output capacitors which was in service for 4 years has to be replaced during preventive maintenance.
7. The total no. of break down calls to be attended depends on the actual requirement.
8. **Validity: Rate Fixed shall be valid for a period of 2 Years from the date of placement of PO.** Validity is extendable for one more year on bilateral agreement.
9. **Operation of Rate Contract: AMC order for each year will be released separately based on the rate fixed by the PO.**
10. **Maintenance Charges:** - This rate shall remain firm and fixed till the entire currency of the contract. No separate payment will be made against the visit of service personnel or their stay. No advance payment will be made against the contract.
11. VSSC reserves the right to place order for appropriate quantity with the established rate, terms and conditions for subsequent years on bilateral agreement.
12. The workers deputed to VSSC by the contractor shall remain the employees of the contractor and they will not acquire any claim for future employment in VSSC or right for regularization as employees of the Dept. of Space.
13. The contractor and his employees deputed to VSSC should abide by the rules and regulations of the Dept. including security checks.
14. **Break-down Reporting: - Focal point for the contract will be the Indenter**. Technicians deployed have to be in contact with ESMD for obtaining latest call status. Company has to submit monthly status to the focal point with the details of calls reported, call attended, pending and carry over from previous month if any, call completion etc. Bills will be forwarded only on receipt of the above reports.
15. **Additions/Deletions:** The contractor and VSSC may, at any time, mutually agree to include additional equipment in this contract which too shall be covered by all the terms and conditions of this contract. In such case the charges of the additional equipment payable to the contractor shall be calculated for the remaining period of the contract with effect from the date of Inclusion .VSSC reserves the right to delete any number of machines from the contract at any time during the currency of the contract.

16. **Fall Clause:** The charges quoted by the party shall be in no event exceed the lowest charges at which they do the same work to any other party during the period of this contract.
17. **Down-Time Compensation:** In case the break-down calls are not completed within 2 Weeks & if substitute UPS is not provided, down time compensation at the rate of 0.5% of the AMC charges of the equipment in question per week will be recovered from the contractor.
18. In the event of violations of any terms and conditions or that the work performance is not meeting the norms of Quality Control of VSSC, the contract shall be terminated after giving ONE Week clear notice and the dispute, if any, shall be referred to an arbitrator who shall be appointed by the Chief Controller, VSSC and his awards shall be final and binding on the parties.
19. VSSC reserve the right to enter into parallel work contract/ adhoc contracts simultaneously or at any time during the period of the contract with one or more contractors for similar work.
20. VSSC also reserve the right to terminate the Contract by giving one week notice without assigning any reasons, thereof.
21. **Payment** : - Pro- rata quarterly [once in three months] at the end of each quarter after satisfactory completion of Preventive maintenance as per schedule and Break down maintenance during the period. Our Service Call Report [Annexure - 'B'] along with your invoice duly signed by the focal point and countersigned by the DDH/DH concerned shall be sent along with your invoice to the Accounts Officer (Bills), 70 Acre VSSC for arranging payment. The invoice shall be in triplicate, Original to the respective paying Authority, Duplicate to your Service Engineer and triplicate to the focal point.
22. **SECURITY DEPOSIT: -** In case of an order, you have to submit an interest free security deposit equivalent to 10% of the Annual contract value in the form of demand draft or Bank Guarantee which will be refunded after due performance of this Contract or shall be adjusted/forfeited against any dues.
23. **EARNEST MONEY DEPOSIT**: Bidders are required to submit Earnest Money Deposit of Rs. 50,000/- along with the tender. The tender without EMD will not be considered. Tenderers seeking exemption from submission of EMD should attach copy of necessary certificate in respect of their eligibility for such exemption. If such documents are not furnished, the tender will not be considered.

24. **Spares**: Any defective item/component (except battery) if required to be replaced shall be done by the contractor free of cost. Contractor has to ensure sufficient stock of items for ready replacement of defective components. Parts brought for replacement shall be endorsed at the CISF gate concerned/Stores.

GOVERNMENT OF INDIA
DEPARTMENT OF SPACE
VIKRAM SARABHAI SPACE CENTRE
PURCHASE UNIT-III,PRSO,RFF AREA
THIRUVANANTHAPURAM 695022
KERALA, INDIA

Ph No: 0471-2563775,3609,3617
Fax 0471-2562105
Email: spso_prso@vssc.gov.in

Date :02/01/2020

INVITATION TO TENDER

Our Ref No : A54B **2019-002595-01**

M/s 000000

Tender Due: 10:00 **Hrs ISTon**

Dear Sirs,

Please submit your sealed quotation , in the Tender Form enclosed here along with the descriptive catalogues / pamphlets /literature ,superscribed with Our Ref.No. and Due Date for the supply of the following items as per the terms & conditions mentioned in Annexure(Form No: FORM NO: 20 & 22 ATTACHED)

S.No.	Description of Items with Specifications	Unit	Quantity
1	SUPPLY, INSTALLATION AND COMMISSIONING OF DUAL CAVITY BLACK BODY APPARATUS.	Set	1
2	Detailed Specifications as Annexure-I. Compliance Matrix as per Annexure-II. Commercial Conditions as per Annexure-III. Tenderers are requested to submit duly filled Compliance Matrix along with the Technical Bid.		
3	Detailed Cost Break-Up shall be provided in Price Bid (if applicable). All price details shall ONLY be entered in the Price Bid.		
4	Tenders shall be submitted on TWO-PART Basis. Detailed Instructions as per Annexure-IV.		

DELIVERY AT: CENTRAL STORES, VSSC

MODE OF DESPATCH BY AIR/ROAD

DUTY EXEMPTIONS EXEMPTED

SPECIAL INSTRUCTIONS COMPLIANCE MATRIX, COMMERCIAL TERMS AND CONDITONS ATTACHED

SPECIFIC TERMS FORM NO: 20 & 22 ATTACHED

SR. PURCHASE & STORES OFFICER
For and on behalf of the President of India
The Purchaser

Annexure 1: Detailed specification of dual cavity black body

The scope of supply for the party is as,

Supply, installation and commissioning of dual cavity black body furnace (schematic is shown in figure 1) for following applications

1. Pyrometer calibration (dual cavity black body, refer figure 2)
2. Heat flux sensor calibration (flat plate assembly attachment, refer figure 3)
3. Open tube assembly with movable sample holder (refer figure 4 and 5)

The dual cavity black body furnace should have the following features -

- The black body furnace should have moveable copper electrode posts which can be expanded or contracted to accommodate modular heater element assemblies of different lengths/dimensions. This is explained in details under section 1.1 and 3.1.
- Should have safety interlocks for smooth operation of the facility.

1) Pyrometer calibration: Dual Cavity Black Body with control pyrometer and PID controller

1.1.	Dual Cavity Black Body	2" (50.8 mm) graphite dual cavity blackbody, one cavity for control and one cavity for measurement. Length to diameter ratio for both cavities should be 5:1 (minimum). A representative figure for dual cavity black body is shown in figure 2. The dual cavity is partitioned using graphite as material as shown in figure 2. **Specifications of graphite** High purity high density extruded graphite shall be used for fabrication of the dual cavity black body Bulk density : ~1.72 g/cm3 Thermal conductivity : >100 W/m-K Grain Size : ~200 microns or lower Specific resistance : ~1140 µOhm-cm (minimum) Flexural strength : 29 MPa (minimum) Compressive strength : 61 MPa (minimum) Tensile strength : 13 MPa (minimum) Coefficient of thermal expansion : ~ 3 x 10E-6 MPa /^{0}C Ash : ~300 ppm The party shall submit the manufacturers original test certificate for the materials along with test reports, before initiating fabrication.
1.2.	Cavity opening	2" (50.8 mm) aperture dual cavity black body
1.3.	Temperature range	500 to 2500°C
1.4.	Accuracy	±0.2% of full scale output
1.5.	Repeatability	±0.5^{o}C
1.6.	Resolution	0.1^{o}C
1.7.	Time to reach maximum temperature	800 s (maximum)
1.8.	Emissivity	0.995 or better

1.9.	Purge gas	Purge gas (Argon) provision to both cavities shall be provided.
1.10.	Sensor (Pyrometer)	Pyrometer sensor based control. One pyrometer shall be supplied along with the equipment. **Optical pyrometer specifications:** ➢ Temperature range : 500 to 3000°C ➢ Wavelength: 900 nm ➢ Accuracy: ±0.2% of full scale output ➢ Repeatability: ±0.5°C ➢ Resolution: better than 0.1°C. Calibration certificate from reputed internationally accredited laboratory (such as NIST, UKAS or any other accredited laboratory) shall be provided along with the supply.
1.11.	Controller	PID controller with touch panel display, to display set point and blackbody temperature. A separate offer shall be provided for one controller as a spare. **Specifications** Controller type : PID based Resolution : 0.1^{o}C Set point increment : 0.1^{o}C (minimum) Quantity to be controlled : Temperature Units of measurement : °C or K Communication/Remote Control : RS232 or LAN There should be a lock in provision for controlled output to maintain the set temperature of the black body without feedback from pyrometer for a specified duration of time. Over temperature controller for the dual cavity black body shall also be provided. There should be provision for recording of the temperature measured using control pyrometer through a separate data acquisition system (data acquisition system is not in the scope of the party).
1.12.	Optical rail bench	Detachable type X-Y sliding optical rail bench (sliding x-y rail system to mount instruments for calibration) shall be provided, refer figure 6. There shall be provision for mounting of two sensors at a time. Pneumatic system should be provided to move mounted sensors on sliding x-y rail system.
1.13	Thermal protection system for dual cavity	Suitable thermal protection system (graphite based insulation system) shall be provided to cover the heating element from exposing to ambient environment and safeguarding the operator from high intensity radiation exposure. The maximum surface temperature of external surface of the furnace shall be limited to 50°C.

2) Heat Flux sensor calibration: Flat plate assembly

2.1.	Flat plate assembly	A flat plate heater assembly shall be provided along with power supply attachments for heat flux sensor calibration. A representative figure for the flat plate assembly is shown in figure 3. For heat flux calibration, the standard sensor and the sensor under calibration should be assembled on both sides of the plate. Standard mounting fixtures should be provided for mounting heat flux sensors. The distance between the sensors and the plate should be adjustable manually and manual locking provision should be there. Dimensions of standard and test sensors (to be calibrated): diameter 25 mm × length 25 mm **Specification** Size of flat plate heater: Size 1- Length 1.5” × Breadth 3” × Thickness 0.125” (100 numbers shall be supplied) Size 2- Length 2” × Breadth 6” × Thickness 0.125” (50 numbers of long plates. Party shall submit a separate offer for the same.) Specifications of graphite – same as specified under section 1.1. Note: The dimensions of the graphite plate are the standard dimensions required for calibration of heat flux sensors. The final dimensions of the plate shall be within the standard open tolerances.
2.2.	Control and operation	The heating of the flat plate assembly shall be controlled manually. A knob shall be provided for controlling the power input to the graphite heating plates. The knob shall be integrated so as to control the heating rate of the plates by the operator manually by seeing the output from the sensor using a data acquisition system (data acquisition system is not in the scope of the party).

3) Open tube assembly with movable sample holder

3.1.	Open Tube assembly	The open tube assembly consists of a graphite open tube (ID 2”) attached to two copper electrode as in figure 4. Length to diameter ratio for open cavity should be 10:1 (minimum). The sample to be tested in the open tube assembly is attached to a sample holder fitted to a graphite rod as in figure 4. The graphite rod along with sample holder is used to traverse the specimen from position A to position B for thermal testing (refer figure 4 and 5). The graphite rod is moved using a pneumatic system.

		The scope of supply includes the following - ➢ Graphite open tube assembly. ➢ Sample holder for holding sample of Φ20 mm. ➢ Graphite rod for traversing the specimen. ➢ Provision should be provided to limit the pneumatic actuator rod and seal temperature. Water cooled metal tube (preferably made of copper) shall be provided for interfacing the graphite rod and pneumatic system. ➢ Pneumatic system for sample movement. ➢ Radiometer for measurement of sample radiation Graphite open tube assembly, Graphite rod and graphite sample holder shall be made from graphite with specifications mentioned in section 1.1.
3.2.	Control and operation	The temperature of the sample shall be controlled using a pyrometer. Pyrometer with specification mentioned in section 1.10 shall be used for controlling the temperature of the specimen. The heating and temperature control of the open tube assembly shall be controlled using a PID controller with touch panel display, to display set point and sample temperature. The specification of the controller should be same as specified in section 1.11. The PID controller shall be incorporated with an option to lock the output control to the furnace at a particular temperature for a specific duration. **Operation** ➢ After attaining the set temperature, the PID controller should be capable to lock the output control to that set point temperature. ➢ The actuation system should be capable of moving the sample from position A to position B within less than one second (refer figure 4 and 5) and back to A in another 2 seconds ➢ The heating of the tube is resumed for next set temperature.
3.3.	Thermal protection system for open tube assembly.	Suitable thermal protection system (graphite based insulation system) shall be provided to cover the heating element from exposing to ambient environment and safeguarding the operator from high intensity radiation exposure. The maximum surface temperature of external surface of the furnace shall be limited to $50^{O}C$.

3.4.	Radiometer	A radiometer with a wide band, flat absorption detector shall be provided for measurement of blackbody radiance and free standing radiance with the following specifications. Make : Thermogauge or Vatel or Medtherm Heat Flux Range: ~500 W/cm^2 Output signal: 0.85 V at full range Response Time : 40 milli second or better Target spot size: < 0.3” Window material: Calcium fluoride Repeatability: ±1% Calibration uncertainty: ±3% Calibration certificate from reputed internationally accredited laboratory shall be provided along with the supply. Spectral transmittance chart for the optical window shall be provided along with the supply.
3.5.	Purge gas	Purge gas (Argon) provision in the cavity shall be provided.

4. General requirements

4.1.	Drawings for verification	Detailed dimensional drawings of the following shall be sent to VSSC for verification after release of the purchase order. ➢ Dual cavity black body, ➢ Flat plate assembly, ➢ Open tube assembly The party shall start fabrication of the system only after acceptance of the drawing at VSSC.
4.2.	Interlocks	Safety Interlock shall be provided for the following- ➢ Low purge gas flow ➢ Low cooling water flow rate ➢ Cooling water over temperature Visual/audio indications shall be provided for safety interlocks.
4.3.	Cooling	Water cooled with re-circulation system. The capacity and flow rate requirements of the recirculator shall be communicated in the offer. Recirculator is not in the scope of supply.
4.4.	Purge gas	Argon flow rate requirement shall be communicated along with offer.
4.5.	Electrical Power Supply Input	The power supply requirements for operation of the furnace having specifications in this document shall be communicated along with the offer. The design should cater for available electrical supply with VSSC (230V/400V, 50 Hz, single phase/ three phase).

4.6.	Spares	The requirement of the following essential spares for 5 years of trouble free operation of the facility shall be quoted separately. 1. Spares for dual cavity blackbody (heating element and assembly) 2. Spares for Open tube assembly. 3. Spare Insulation System. 4. Spares for flat plate assembly.
4.7.	Manual	Detailed technical manual in English for operation, regular maintenance and servicing should be provided along with the apparatus. The manual should also contain the details of controller.
4.8.	Warranty	Minimum 1 year warranty after installation, commissioning and acceptance at VSSC.
4.9	Annual maintenance contract (AMC)	The party may quote their charges (per annum) for AMC (non-comprehensive, with 1 visit/year and a breakdown maintenance) for a minimum period of 5 years. AMC commences after warranty.
4.10.	Delivery	8 months from the date of approval of the drawings specified in section 4.1 by VSSC.
4.11.	Delivery schedule	Complete drawings as specified in section 4.1 shall be submitted within 45 days of receipt of purchase order for approval from VSSC. Time line for execution of different stages from the date of purchase order should be submitted by the party within 14 days of receipt of purchase order. Dispatch of the item can be done after successful demonstration the system at parties work site as per PDI detailed in section 4.12. The final acceptance of the system will be after successful installation and demonstration of all subsystems at VSSC. Party's responsibility at different stages are 1. Submission of schedules 2. Submission of drawings for approval 3. Fabrication after receiving approved drawings from VSSC. 4. PDI & Delivery to VSSC 5. Installation, Commissioning and demonstration at VSSC.
4.12.	Pre-Delivery Inspection	During Pre delivery inspection the following documents and test certificates will be reviewed. ➢ All raw material certificates with all test reports and supporting documents. ➢ All inspection reports generated by the party as per QC / QA plan. Before delivery to VSSC, operations for the following to be demonstrated at the party's site. 1. Pyrometer calibration 2. Heat flux sensor calibration 3. Testing of open tube assembly with movable sample holder The complete system shall be dispatched to VSSC only after inspection and clearance.

4.13.	Packing, handling and transportation	The total system shall be properly packed and transported to VSSC. Care shall be taken to prevent handling and transportation damages. Supplier is responsible for the safe delivery of the system at VSSC stores.
4.14.	Installation, Commissioning and training at VSSC	The party shall install and commission the equipment at VSSC. After installation and commissioning, the full range operations for the following activities shall be demonstrated and training shall be provided. 1. Pyrometer calibration 2. Heat flux sensor calibration 3. Open tube assembly with movable sample holder
4.15.	Compliance Matrix	The party needs to submit the compliance matrix (attached in Annexure 2) with their initial offer, for all the points mentioned above.
4.16.	Others	Quotation should include detailed brochure on technical specification of the apparatus. Party should provide the list of users to whom the same equipment has been supplied. Specifications of any auxiliary utilities such as power supply, gas supply to be provided by user of equipment should be indicated. **No relaxation of any specification will be allowed at any later stage after release of Purchase Order.**

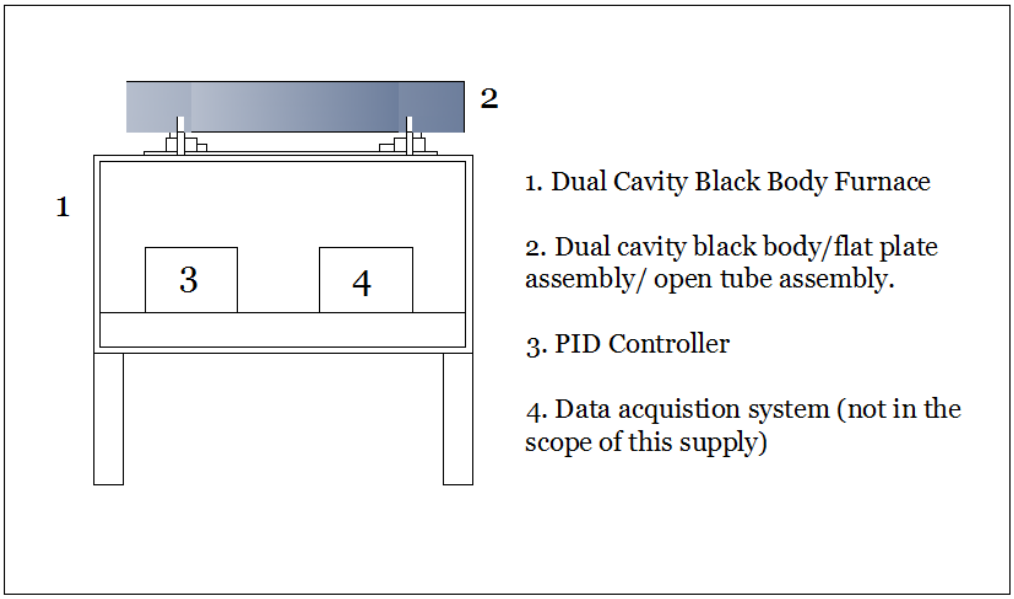

Figure 1. Dual Cavity Black Body Furnace Schematic

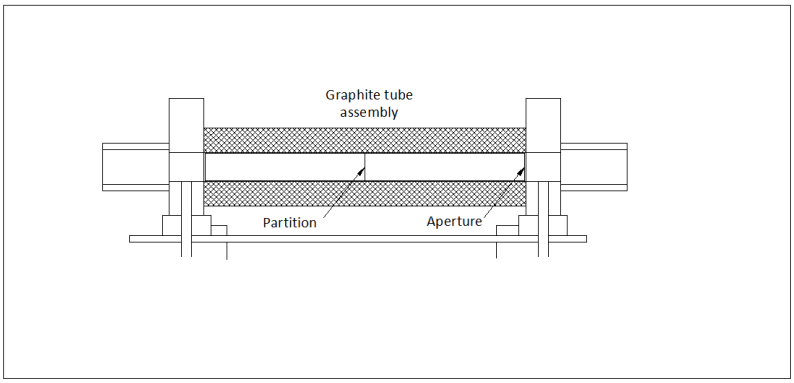

Figure 2. Schematic of dual black body cavity (2”)

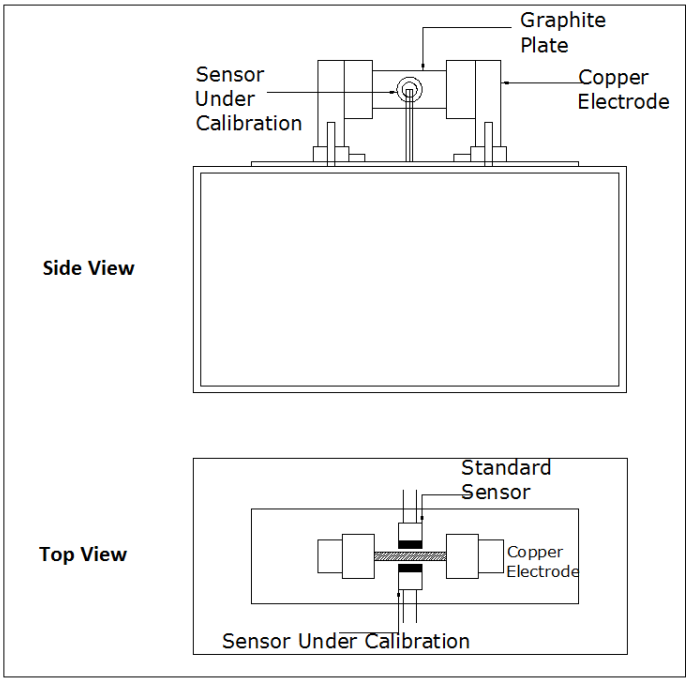

Figure *3*. Schematic of flat plate assembly

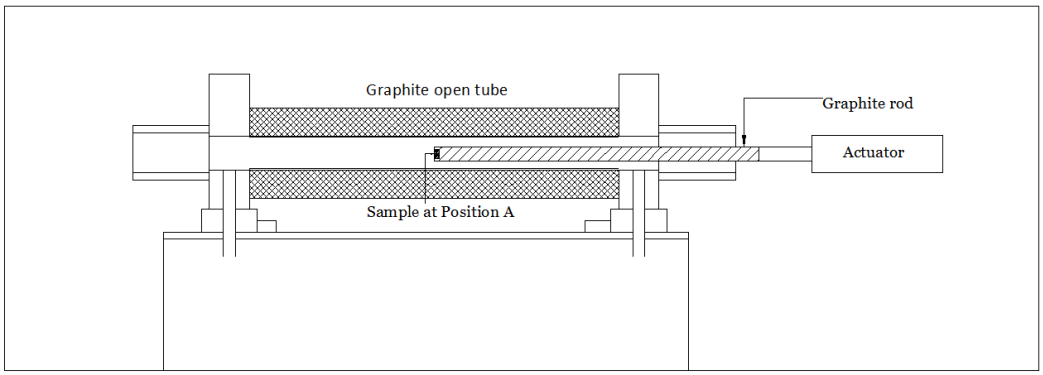

Figure 4. Schematic of the open tube assembly – Sample at position A

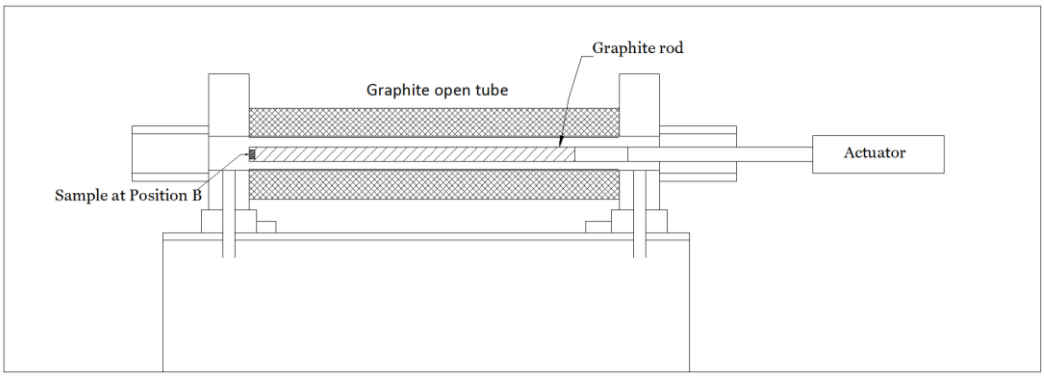

Figure 5. Schematic of the open tube assembly – Sample at position B

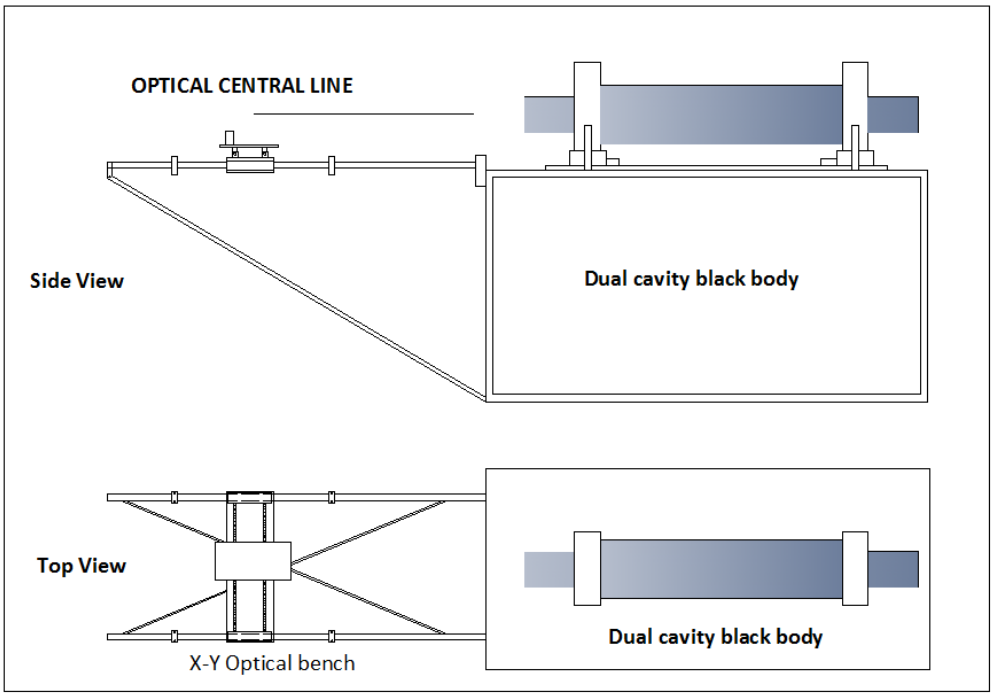

Figure 6. Schematic of X-Y sliding optical rail bench

Annexure 2

Dual cavity black body
Compliance Matrix

Sl No	VSSC specification	Complied		Reason for non-Compliance/ additional information.
		Yes	No	
1) Pyrometer calibration: Dual Cavity Black Body with control pyrometer and PID controller				
1.1.	**Dual Cavity Black Body** 2" (50.8 mm) graphite dual cavity blackbody, one cavity for control and one cavity for measurement. Length to diameter ratio for both cavities should be 5:1 (minimum). A representative figure for dual cavity black body is shown in figure 2. The dual cavity is partitioned using graphite as material as shown in figure 2. **Specifications of graphite** High purity high density extruded graphite shall be used for fabrication of the dual cavity black body Bulk density : ~1.72 g/cm3 Thermal conductivity : >100 W/m-K Grain Size : ~200 microns or lower Specific resistance (minimum) : ~1140 µOhm-cm Flexural strength : 29 MPa (minimum) Compressive strength : 61 MPa (minimum) Tensile strength : 13 MPa (minimum) Coefficient of thermal expansion : ~ 3 x 10E-6 MPa /^{0}C Ash : ~300 ppm The party shall submit the manufacturers original test certificate for the materials along with test reports, before initiating fabrication.			
1.2.	**Cavity opening** 2" (50.8mm) aperture dual cavity black body			
1.3.	**Temperature range** 500 to 2500°C			
1.4.	**Accuracy** ±0.2% of full scale output			

1.5.	**Repeatability** ±0.5ºC			
1.6.	**Resolution** 0.1ºC			
1.7.	**Time to reach maximum temperature** 800 s (maximum)			
1.8.	**Emissivity** 0.995 or better			
1.9.	**Purge gas** Purge gas (Argon) provision to both cavities shall be provided.			
1.10.	**Sensor (Pyrometer)** Pyrometer sensor based control. One pyrometer shall be supplied along with the equipment. **Optical pyrometer specifications:** ➢ Temperature range : 500 to 3000ºC ➢ Wavelength: 900nm ➢ Accuracy: ±0.2% of full scale output ➢ Repeatability: ±0.5°C ➢ Resolution: better than 0.1°C. Calibration certificate from reputed internationally accredited laboratory (such as NIST, UKAS or any other accredited laboratory) shall be provided along with the supply.			
1.11.	**Controller** PID controller with touch panel display, to display set point and blackbody temperature. A separate offer shall be provided for one controller as a spare. **Specifications** Controller type : PID based Resolution : 0.1ºC Set point increment (minimum) : 0.1ºC Quantity to be controlled : Temperature Units of measurement : °C or K Communication/Remote Control : RS232 or LAN. There should be a lock in provision for controlled output to maintain the set temperature of the black body without feedback from pyrometer for a specified duration of time. Over temperature controller for the dual cavity black body shall also be provided. There should be provision for recording of the			

	temperature measured using control pyrometer through a separate data acquisition system (data acquisition system is not in the scope of the party).			
1.12.	**Optical rail bench** Detachable type X-Y sliding optical rail bench (sliding x-y rail system to mount instruments for calibration) shall be provided, refer figure 6. There shall be provision for mounting of two sensors at a time. Pneumatic system should be provided to move mounted sensors on sliding x-y rail system.			
1.13	**Thermal protection system for dual cavity** Suitable thermal protection system (graphite based insulation system) shall be provided to cover the heating element from exposing to ambient environment and safeguarding the operator from high intensity radiation exposure. The maximum surface temperature of external surface of the furnace shall be limited to 50°C.			
2) Heat Flux sensor calibration: Flat plate assembly				
2.1.	**Flat plate assembly** A flat plate heater assembly shall be provided along with power supply attachments for heat flux sensor calibration. A representative figure for the flat plate assembly is shown in figure 3. For heat flux calibration, the standard sensor and the sensor under calibration should be assembled on both sides of the plate. Standard mounting fixtures should be provided for mounting heat flux sensors. The distance between the sensors and the plate should be adjustable manually and manual locking provision should be there. Dimensions of standard and test sensors (to be calibrated): diameter 25 mm × length 25mm **Specification** Size of flat plate heater: Size 1 - Length 1.5” × Breadth 3” × Thickness 0.125” (100 numbers shall be supplied) Size 2 - Length 2” × Breadth 6” × Thickness 0.125” (50 numbers of long plates. Party shall submit a separate offer for the same.) Specifications of graphite – same as specified under section 1.1. Note: The dimensions of the graphite plate are the			

	standard dimensions required for calibration of heat flux sensors. The final dimensions of the plate shall be within the standard open tolerances.			
2.2.	**Control and operation** The heating of the flat plate assembly shall be controlled manually. A knob shall be provided for controlling the power input to the graphite heating plates. The knob shall be integrated so as to control the heating rate of the plates by the operator manually by seeing the output from the sensor using a data acquisition system (data acquisition system is not in the scope of the party).			
3) Open tube assembly with movable sample holder				
3.1.	**Open Tube assembly** The open tube assembly consists of a graphite open tube (ID 2”) attached to two copper electrode as in figure 4. Length to diameter ratio for open cavity should be 10:1 (minimum). The sample to be tested in the open tube assembly is attached to a sample holder fitted to a graphite rod as in figure 4. The graphite rod along with sample holder is used to traverse the specimen from position A to position B for thermal testing (refer figure 4 and 5). The graphite rod is moved using a pneumatic system. The scope of supply includes the following - ➢ Graphite open tube assembly. ➢ Sample holder for holding sample of Φ20mm. ➢ Graphite rod for traversing the specimen. ➢ Provision should be provided to limit the pneumatic actuator rod and seal temperature. Water cooled metal tube (preferably made of copper) shall be provided for interfacing the graphite rod and pneumatic system. ➢ Pneumatic system for sample movement. ➢ Radiometer for measurement of sample radiation Graphite open tube assembly, Graphite rod and graphite sample holder shall be made from graphite with specifications mentioned in section 1.1.			
3.2.	**Control and operation** The temperature of the sample shall be controlled using a pyrometer. Pyrometer with specification mentioned in section 1.10 shall be used for controlling the temperature of the specimen.			

	The heating and temperature control of the open tube assembly shall be controlled using a PID controller with touch panel display, to display set point and sample temperature. The specification of the controller should be same as specified in section 1.11. The PID controller shall be incorporated with an option to lock the output control to the furnace at a particular temperature for a specific duration. **Operation** ➢ After attaining the set temperature, the PID controller should be capable to lock the output control to that set point temperature. ➢ The actuation system should be capable of moving the sample from position A to position B within less than one second (refer figure 4 and 5) and back to A in another 2 seconds ➢ The heating of the tube is resumed for next set temperature.			
3.3.	**Thermal protection system for open tube assembly.** Suitable thermal protection system (graphite based insulation system) shall be provided to cover the heating element from exposing to ambient environment and safeguarding the operator from high intensity radiation exposure. The maximum surface temperature of external surface of the furnace shall be limited to 50°C.			
3.4.	**Radiometer** A radiometer with a wide band, flat absorption detector shall be provided for measurement of blackbody radiance and free standing radiance with the following specifications. Make : Thermogauge or Vatel or Medtherm Heat Flux Range: ~500 W/cm^2 Output signal: 0.85V at full range Response Time : 40 millisecond or better Target spot size: < 0.3” Window material: Calcium fluoride Repeatability: ±1% Calibration uncertainty: ±3% Calibration certificate from reputed internationally accredited laboratory shall be provided along with the supply. Spectral transmittance chart for the optical window shall be provided along with the supply.			

3.5.	**Purge gas** Purge gas (Argon) provision in the cavity shall be provided.			
4. General requirements				
4.1.	**Drawings for verification** Detailed dimensional drawings of the following shall be sent to VSSC for verification after release of the purchase order. ➢ Dual cavity black body, ➢ Flat plate assembly, ➢ Open tube assembly The party shall start fabrication of the system only after acceptance of the drawing at VSSC.			
4.2.	**Interlocks** Safety Interlock shall be provided for the following- ➢ Low purge gas flow ➢ Low cooling water flow rate ➢ Cooling water over temperature Visual/audio indications shall be provided for safety interlocks.			
4.3.	**Cooling** Water cooled with re-circulation system. The capacity and flow rate requirements of the recirculator shall be communicated in the offer. Recirculator is not in the scope of supply.			
4.4.	**Purge gas** Argon flow rate requirement shall be communicated along with offer.			
4.5.	**Electrical Power Supply Input** The power supply requirements for operation of the furnace having specifications in this document shall be communicated along with the offer. The design should cater for available electrical supply with VSSC (230V/400V, 50 Hz, single phase/ three phase).			
4.6.	**Spares** The requirement of the following essential spares for 5 years of trouble free operation of the facility shall be quoted separately. 1. Spares for dual cavity blackbody (heating element and assembly) 2. Spares for Open tube assembly. 3. Spare Insulation System. 4. Spares for flat plate assembly.			

4.7.	**Manual** Detailed technical manual in English for operation, regular maintenance and servicing should be provided along with the apparatus. The manual should also contain the details of controller.			
4.8.	**Warranty** Minimum 1 year warranty after installation, commissioning and acceptance at VSSC.			
4.9	**Annual maintenance contract (AMC)** The party may quote their charges (per annum) for AMC (non-comprehensive, with 1 visit/year and a breakdown maintenance) for a minimum period of 5 years. AMC commences after warranty.			
4.10.	**Delivery** 8 months from the date of approval of the drawings specified in section 4.1 by VSSC.			
4.11.	**Delivery schedule** Complete drawings as specified in section 4.1 shall be submitted within 45 days of receipt of purchase order for approval from VSSC. Time line for execution of different stages from the date of purchase order should be submitted by the party within 14 days of receipt of purchase order. Dispatch of the item can be done after successful demonstration the system at parties work site as per PDI detailed in section 4.12. The final acceptance of the system will be after successful installation and demonstration of all subsystems at VSSC. Party's responsibility at different stages are 1. Submission of schedules 2. Submission of drawings for approval 3. Fabrication after receiving approved drawings from VSSC. 4. PDI & Delivery to VSSC 5. Installation, Commissioning and demonstration at VSSC.			
4.12.	**Pre-Delivery Inspection** During Pre delivery inspection the following documents and test certificates will be reviewed. ➢ All raw material certificates with all test reports and supporting documents. ➢ All inspection reports generated by the party as per QC / QA plan. Before delivery to VSSC, operations for the following to be demonstrated at the party's site.			

	1. Pyrometer calibration 2. Heat flux sensor calibration 3. Testing of open tube assembly with movable sample holder The complete system shall be dispatched to VSSC only after inspection and clearance.			
4.13.	**Packing, handling and transportation** The total system shall be properly packed and transported to VSSC. Care shall be taken to prevent handling and transportation damages. Supplier is responsible for the safe delivery of the system at VSSC stores.			
4.14.	**Installation, Commissioning and training at VSSC** The party shall install and commission the equipment at VSSC. After installation and commissioning, the full range operations for the following activities shall be demonstrated and training shall be provided. 1. Pyrometer calibration 2. Heat flux sensor calibration 3. Open tube assembly with movable sample holder			
4.15.	**Others** Quotation should include detailed brochure on technical specification of the apparatus. Party should provide the list of users to whom the same equipment has been supplied. Specifications of any auxiliary utilities such as power supply, gas supply to be provided by user of equipment should be indicated. **No relaxation of any specification will be allowed at any later stage after release of Purchase Order.**			

COMMERCIAL CONDITIONS

1. The price of main equipment, sub-systems, accessories etc., shall be indicated separately in the price bid alone.

2. Warranty: Minimum One Year Warranty from the date of Installation and Commissioning at our site for Main Equipment and Accessories. Any Technical Requirements and problems need to be supported during warranty period.

3. List of Essential Spares/Consumables for the equipment required for 2 years smooth functioning to be provided along with techno-commercial bid. The price of the same shall be indicated separately in price bid.

4. Annual Maintenance Contract (AMC): The vendor must undertake Non-Comprehensive AMC for minimum 5 years beyond warranty period. Cost of AMC per year shall be mentioned separately in the Price Bid. The same shall be considered for evaluation.

5. Acceptance of EMD (if applicable), SD, PBG and LD as mentioned below is mandatory for evaluation of the bids.

GENERAL TERMS AND CONDITIONS

1. Please submit the Technical Details / Catalogue / Data Sheets.

2. Please keep and confirm the offer validity minimum 180 days [120 days for Part-I & 60 days for Part-II] from the date of opening of tender.

3. **Please send the quotations ONLY in 'SEALED COVER' indicating our tender enquiry No. and due date by speed post so as to reach us on or before the due date & time. VSSC will not be responsible for any postal delays. Detailed Instructions given in Separate Annexure. E-mail/ fax quotations 'WILL NOT BE ACCEPTED'.**

4. **For Indigenous tenders,**

Please quote applicable GST separately.

(a) We are eligible for partial exemption of IGST vide Notification No: 47/2017-Integrated Tax (Rate) dtd 14/11/2017 and 45/2017-Central Tax (Rate) dtd 14/11/2017 issued by Dept. of Revenue, Ministry of Finance. Necessary Exemption Certificates will be issued on demand.

(b) We are eligible for partial exemption of CGST and SGST vide Notification No: 45/2017 dtd 14/11/2017 and No: 169/2017/TAXES dtd 15/11/2017 respectively. Necessary Exemption Certificates will be issued on demand.

5. As per Notification No. 50/2017-Customs dated 30.06.2017 as amended by Notification No. 5/2018-CUSTOMS DTD. 25/01/2018, we are eligible for concessional payment of customs duty and IGST. The necessary Customs Duty Exemption Certificate shall be provided by VSSC for availing CD Exemption. Tenderers are requested to take note of the CD Exemption available to ISRO/VSSC and accordingly submit the offer without Customs Duty (applicable only in the case of imported items).

6. PAYMENT**:** Our standard payment term is 100% within 30 days on after receipt & acceptance of the item at our site for Indigenous orders and Sight Draft for foreign orders.

7. In case if any Bidder is submitting their Offer on HIGH SEA SALES BASIS: then the Indian Trader shall submit the following documents **mandatorily along with their offer.**

a. The Import Export Code of the Indian Trader
b. Bank Authorization Code of the Indian Trader
c. GSTIN of the Indian Trader<

Likewise, while executing the Purchase Order/Contract; the Indian Trader shall mandatorily submit the following:

a. High Sea Sale Agreement.
b. Invoice pertaining to the Indian Trader in INR and the invoice of the foreign vendor in foreign currency.

8. In case of Foreign/Import Tenders:

a. The bidder shall clearly mention the full ordering address in capital letters.
b. The bidder shall clearly mention their banker's address including their SWIFT code compulsorily.
c. Any change of address shall be compulsorily supported by Documentary proof issued either by Governmental agencies or by Chamber of Commerce.
d. Foreign Principal's Proforma Invoice/quote indicating the Agency Commission payable to the Indian Agent and the nature of after sales service to be rendered by the Indian Agent.
e. Copy of the Agency Agreement between the Foreign Principal and the Indian Agent, and the precise relationship between them their mutual interest in the

business.

f. Registration and Item empanelment of the Indian Agent.

9. **Where agents participate in a tender;**
   (a) Either the Indian agent on behalf of the Principal/OEM or Principal/OEM itself can bid but both cannot bid simultaneously for the same item/product in the same tender.
   (b) If an agent submits bid on behalf of the Principal/OEM, the same agent shall not submit a bid on behalf of another Principal/OEM in the same tender for the same item/product.

10. VSSC has a right to cancel the tender without assigning any reason etc.

11. **Delivery Terms (normal):** FOR Destination (for Indigenous cases) & FOB/ FCA or Ex-works (for Import cases). Packing and Forwarding Charges, FCA Charges extra, if any, shall be mentioned separately in the price bid.

12. **Payment:** Our standard payment term is 100% within 30 days for indigenous orders and Sight Draft for foreign orders.

13. **Earnest Money Deposit (EMD)** ***(Mandatory):***The vendors who are not registered with VSSC, shall submit an EMD(Earnest Money Deposit) or Bid Security in the form of DD/Banker's Cheque/Fixed Deposit Receipt for **Rs. 2,00,000/- (Rs. Two Lakhs only).** The EMD of the unsuccessful vendor will be returned without any interest within 30 days from the date of finalization. ***Foreign vendors, registered vendors or vendors who have already applied for renewal of registration, Central PSUs/PSEs/Autonomous Bodies/MSMEs etc., shall be exempted from payment of EMD. Vendors seeking exemption from payment of EMD shall submit necessary proof like registration number(vendor code), etc***. The quotation submitted by unregistered vendor without EMD will not be considered. The EMD submitted by unregistered vendors will be forfeited in the case of withdrawal of quotation or amendments in quotation or any such deviation in a later period.

14. **Liquidated Damages** ***(mandatory compliance required)*** - the delivery and Installation period mentioned in the order will be the essence of the order /Contract. In case of delay in delivery/Installation of material as per the delivery schedule mutually agreed and stipulated in the order, Liquidated Damages@0.5% per week or part thereof on the undelivered portion subject to a maximum of 10% of the contract value shall be levied. Hence delivery date mentioned in the quotation shall be realistic. Failure to comply shall lead to the rejection of offer.

15. **Security Deposit** ***(mandatory compliance required)*****:** In the event of placement of order, you should submit Security Deposit at 10% of the order value of the P.O. The Security Deposit shall valid for a period of 60 days beyond the date of completion and acceptance of P.O/Contract. The Security Deposit will be discharged without any interest after completion and acceptance of the Contractual obligations. In case if contractor fails to execute the order after submission of SD, then SD shall be forfeited.

16. **Performance Bank Guarantee *(mandatory compliance required)*:** Wherever products offered carry warranty, please confirm submission of Performance Bank Guarantee. The Performance Bank Guarantee should be for 10% of the order value covering the warranty period obtained from any Scheduled Bank on Rs.200/- Non Judicial Stamp Paper and should be valid beyond 2 months from the completion of the warranty period. Alternately vendors can request for withholding 10% payment till completion of the warranty period.

Note:

1. In order to avail of the benefits extended by Government of India to the Micro and Small sectors, please submit attested copy of the valid Entrepreneur Memorandum Part-II signed by the General manager, District Industries Centre or NSIC or MSME Registration Certificate along with your offer. **(Note: MSME/NSIC vendors are not exempted from the payment of Security Deposit/Performance Bank Guarantee).**

2. Form No. 20&22 attached herewith are Standard forms. Wherever there is a conflict occurs between the conditions of Form No. 20/22and COMMERCIAL CONDITIONS, the conditions in the COMMERCIAL CONDITIONS shall prevail.

3. **For Advertised Tenders in Newspapers/ Hosted in ISRO/VSSC Websites (Public Tenders) only: Technical Bids will be opened at the scheduled due date & time. No further intimation will be sent to you in this regard. Interested parties can attend the Technical Bid opening at their own cost to know the tender details.**

Annexure-IV

SPECIAL CONDITIONS IN RESPECT OF TWO-PART TENDERS

I.PART1-TECHNICAL AND COMMERCIAL BID (in duplicate) in one cover.

Technical and Commercial Part should clearly indicate the technical details, scope of supply, payment terms, delivery terms, [FOB/FOR/Ex-Works] delivery period, taxes and duties, warranty, guarantee, security deposit, performance bank guarantee, etc. under separate heads. Please note that the price should NOT be indicated in the Technical and Commercial Offer.

Complete literature/leaflets/catalogues or brochures relevant to the offered models are to be enclosed with the Technical and Commercial Part of the Tender.

The cover should clearly be super scribed **"Technical and Commercial Bid"**. The Tender Number-Due Date and Time should also be indicated on the cover.

II. PART II –PRICE BID in one cover:-

Price alone should be indicated (in duplicate). Wherever installation commissioning is involved, such charges any be indicated separately in the Price Bid.

The cover should clearly be superscribed "**Price Bid**". The Tender Number- Due Date and Time should also be indicated on the cover.

III. The "Technical and Commercial Bid" and the "Price Bid" are to be in separate sealed covers and they should be put into a single envelope superscribed with the **Tender Number, Due Date and Time.** The cover thus prepared should be sent to the following address so as to reach us on or before the due date and time specified in the tender form.

Sr. Purchase Officer
Purchase Unit No.III
Vikram Sarabhai Space Centre
ISRO PO
Trivandrum –695 022

IV. Tenders any be hand delivered or sent by post or through couriers. Levels of responsibility and reliability among couriers with respect to the delivery to VSSC are not entirely satisfactory and tenderers shall therefore choose the couriers with particular care.

V. The offer should be valid for a minimum period of 180 days from the due date(120 days for technical bid & 60 days for price bid)

VI. **TENDER OPENING**. The Technical and Commercial Bid will be opened on the specified day and in case any further clarifications/discussions are required, such clarifications/discussions shall be called for before opening the Price Bid.

VII. Late and Delayed Tenders will not be considered. Therefore, please ensure that your tender is posted well in time to reach us before the due date and time.

VIII. Tenders, which are not prepared in terms of these instructions, are liable to be rejected.

IX. Fax offers shall not be considered for **TWO PART BIDS.**

X. All the pages of your offer should be signed/initialed by competent authority and affixed with your Company's Seal

, **Form No. DOS:PM:20**

DEPARTMENT OF SPACE
VIKRAM SARABHAI SPACE CENTRE
PURCHASE UNIT-III
PRSO PURCHASE,
RFF AREA, ISRO P.O.,
THIRUVANANTHAPURAM- 695 022

Tele No: 0471-256 3775, 3617, 3609 Fax No: 0471-256 2105
E-Mail ID: spso_prso_pur@vssc,gov.in

INSTRUCTIONS TO TENDERERS

1. Tenders should be sent in sealed envelopes superscribing the relevant tender No, and the due date of opening. Only one tender should be sent in each envelope.
2. Late tenders and delayed tenders will not be considered.
3. Sales Tax and/or other duties/levies legally leviable and intended to be claimed should be distinctly shown separately in the tender.
4. As a Government of India Department, this office is exempted from payment of Octroi and similar local levies. Tenderers shall ensure that necessary Exemption Certificates are obtained by them from the Purchase Officer concerned to avoid any payment of such levies.
5. a) Your quotation should be valid for 90 days from the date of opening of the tender.
   b) Prices are required to be quoted according to the units indicated in the annexed tender form. When quotations are given in terms of units other than those specified in the tender form, relationship between the two sets of units must be furnished.
6. Preference will be given to those tenders offering supplies from ready stocks and on the basis of FOR destination/delivery at site.
7. (a) All available technical literature, catalogues and other data in support of the specifications and details of the items should be furnished along with the offer.
   (b) Samples, if called for, should be submitted free of all charges by the tenderer and the Purchaser shall not be responsible for any loss or damage thereof due to any reason whatsoever. In the event of nonacceptance of tender, the tenderer will have to remove the samples at his own expense.
   (c) Approximate net and gross weight of the items offered shall be indicated in your offer. If dimensional details are available the same should also be indicated in your offer.
   (d) **Specifications**: Stores offered should strictly confirm to our specifications. Deviations, if any, should be clearly indicated by the tenderer in his quotation. The tenderer should also indicate the Make/Type number of the stores offered and provide catalogues, technical literature and samples, wherever necessary, along with the quotations. Test Certificates, wherever necessary, should be forwarded along with supplies. Wherever options have been called for in our specifications, the tenderer should address all such options. Wherever specifically mentioned by us, the tenderer could suggest changes to specifications with appropriate response for the same.
8. The purchaser shall be under no obligation to accept the lowest or any tender and reserves the right of acceptance of the whole or any part of the tender or portions of the quantity offered and the tenderers shall supply the same at the rates quoted.
9. Corrections, if any, must be attested. All amounts shall be indicated both in words as well as in figures. Where there is difference between amount quoted in words and figures, amount quoted in words shall prevail.
10. The tenderer should supply along with his tender, the name of his bankers as well as the latest Income- Tax clearance certificate duly countersigned by the Income-Tax Officer of the Circle concerned under the seal of his office, if required by the Purchaser.
11. The Purchaser reserves the right to place order on the successful tenderer for additional quantity up to 25% of the quantity offered by them at the rates quoted.
12. The authority of the person signing the tender, if called for, should be produced.

TERMS & CONDITIONS OF TENDER

1. DEFINITIONS:

(a) The term 'Purchaser' shall mean the President of India or his successors or assigns.

(b) The term 'Contractor' shall mean, the person, firm or company with whom or with which the order for the supply of stores is placed and shall be deemed to include the Contractor's successors, representative, heirs, executors and administrators unless excluded by the Contract.

c) The term 'Stores' shall mean what the Contractor agrees to supply under the Contract as specified in the Purchase Order including erection of plants & machinery and subsequent testing, should such a condition is included in the Purchase Order.

d) The term 'Purchase Order' shall mean the communication signed on behalf of the Purchaser by an Officer duly authorised intimating the acceptance on behalf of the Purchaser on the terms and conditions mentioned or referred to in the said communication accepting the tender or offer of the Contractor for supply of stores or plant, machinery or equipment or part thereof.

2. PRICES**:**

Tender offering firm prices will be preferred. Where a price variation clause is insisted upon by a tenderer, quotation with a reasonable ceiling should be submitted. Such offers should invariably be supported by the base price taken into account at the time of tendering and also the formula for any such variation/s.

3. SECURITY DEPOSIT:

On acceptance of the tender, the Contractor shall, at the option of the Purchaser and within the period specified by him, deposit with him, in cash or in any other form as the Purchaser may determine, security deposit not exceeding ten percent of the value of the Contract as the Purchaser shall specify. If the Contractor is called upon by the Purchaser to deposit, 'Security' and the Contractor fails to provide the security within the period specified, such failure shall constitute a breach of the Contract, and the Purchaser shall be entitled to make other arrangements for the re-purchase of the stores Contracted at the risk of the Contractor in terms of Sub-Clause (ii) and (iii) of clause 10(b) hereof and/or to recover from the Contractor, damages arising from such cancellation.

4. GUARANTEE & REPLACEMENT:

(a) The Contractor shall guarantee that the stores supplied shall comply fully with the specifications laid down, for material, workmanship and performance.

(b) For a period of twelve months after the acceptance of the stores, if any defects are discovered therein or any defects therein found to have developed under proper use, arising from faulty stores design or workmanship, the Contractor shall remedy such defects at his own cost provided he is called upon to do so within a period of 14 months from the date of acceptance thereof by the purchaser who shall state in writing in what respect the stores or any part thereof are faulty.

(c) If, in the opinion of the purchaser, it becomes necessary to replace or renew any defective stores such replacement or renewal shall be made by the Contractor free of all costs to the purchaser, provided the notice informing the Contractor of the defect is given by the purchaser in this regard within the said period of 14 months from the date of acceptance thereof.

(d) Should the Contractor fail to rectify the defects, the purchaser shall have the right to reject or repair or replace at the cost of the Contractor the whole or any portion of the defective stores.

(e) The decision of the purchaser notwithstanding any prior approval or acceptance or inspection thereof on behalf of the purchaser, as to whether or not the stores supplied by the Contractor are defective or any defect has developed within the said period of 12 months or as to whether the nature of the defects requires renewal or replacement, shall be final, conclusive and binding on the Contractor.

(f) To fulfil guarantee conditions outlined in clause 4 (a) to (e) above, the Contractor shall, at the option of the purchaser, furnish a Bank Guarantee (as prescribed by the purchaser) from a Bank approved by the purchaser for an amount equivalent to 10% of the value of the Contract along with first shipment documents. On the performance and completion of the Contract in all respects, the Bank Guarantee will be returned to the Contractor without any interest.

(g) All the replacement stores shall also be guaranteed for a period of 12 months from the date of arrival of the stores at purchaser's site.

(h) Even while the 12 months guarantee applies to all stores, in case where a greater period is called for by our specifications then such a specification shall apply in such cases the period of 14 months referred to in para 4 (b) & (c) shall be the 'asked for' guarantee period plus two months.

5. PACKING FORWARDING & INSURANCE:

The Contractor will be held responsible for the stores being sufficiently and properly packed for transport by rail, road, sea or air to withstand transit hazards and ensure safe arrival at the destination. The packing and marking of packages shall be done by and at the expense of the Contractor. The purchaser will not pay separately for transit insurance, all risks in transit being exclusively of the Contractor and the Purchaser shall pay only for such stores as are actually received in good condition in accordance with the Contract.

6. DESPATCH:

The Contractor is responsible for obtaining a clear receipt from the Transport Authorities specifying the goods despatched. The consignment should be despatched with clear Railway Receipt/Lorry Receipt. If sent in any other mode, it shall be at the risk of the Contractor. Purchaser will take no responsibility for short deliveries or wrong supply of goods when the same are booked on 'said to contain' basis. Purchaser shall pay for only such stores as are actually received by them in accordance with the Contract.

7. TEST CERTIFICATE:

Wherever required, test certificates should be sent along with the despatch documents.

8. ACCEPTANCE OF STORES:

(a) The stores shall be tendered by the Contractor for inspection at such places as may be specified by the purchaser at the Contractor's own risk, expense and cost.

(b) It is expressly agreed that the acceptance of the stores Contracted for, is subject to final approval by the purchaser, whose decision shall be final.

(c) If, in the opinion of the purchaser, all or any of the stores do not meet the performance or quality requirements specified in the Purchase Order, they may be either rejected or accepted at a price to be fixed by the purchaser and his decision as to rejection and the prices to be fixed shall be final and binding on the Contractor.

(d) If the whole or any part of the stores supplied are rejected in accordance with Clause No. 8 (c) above, the purchaser shall be at liberty, with or without notice to the Contractor, to purchase in the open market at the expense of the Contractor stores meeting the necessary performance and quality Contracted for in place of those rejected, provided that either the purchase, or the agreement to purchase, from another supplier is made within six months from the date of rejection of the stores as aforesaid.

9. REJECTED STORES:

Rejected stores will remain at destination at the Contractor's risk and responsibility. If instructions for their disposal are not received from the Contractor within a period of 14 days from the date of receipt of the advice of rejection, the purchaser or his representative has, at his discretion, the right to scrap or sell or consign the rejected stores to Contractor's address at the Contractor's entire risk and expense, freight being payable by the Contractor at actuals.

10. DELIVERY**:**

(a) The time for and the date of delivery of the stores stipulated in the Purchase Order shall be deemed to be the essence of the Contract and delivery must be completed on or before the specified dates.

(b) Should the Contractor fail to deliver the stores or any consignment thereof within the period prescribed for such delivery, the purchaser shall be entitled at his option either.

(i) to recover from the Contractor as agreed liquidated damages and not by way of penalty, a sum of 0.5% per week of the price of any stores which the Contractor has failed to deliver as aforesaid or during which the delivery of such store may be in arrears subject to a minimum of 10%, or

(ii) to purchase from elsewhere, without notice to the Contractor on the account and at the risk of the Contractor, the stores not delivered or others of a similar description (where others exactly complying with the particulars, are not, in the opinion of the purchaser, readily procurable, such opinion being final) without cancelling the Contract in respect of the consignment (s) not yet due for delivery, or

(iii) to cancel the Contract or a portion thereof and if so desired to purchase or authorise the purchase of stores not so delivered or others of a similar description (where others exactly if complying with the particulars are not, in the opinion of the purchaser, readily procurable, such opinion final) at the risk and cost of the Contractor.

In the event of action being taken under sub-clause (ii) & (iii) of clause 10 (b) above, the Contractor shall be liable for any loss which the purchaser may sustain on that account, provided that the re-purchase or if there is an agreement to repurchase then such agreement is made within six months from the date of such failure. But the Contractor shall not be entitled to any gain on such re-purchase made against default. The manner and method of such re-purchase shall be at the discretion of the purchaser, whose decision shall be final. It shall not be necessary for the purchaser to serve a notice of such re-purchase on the defaulting Contractor. This right shall be without prejudice to the right of the purchaser to recover damages for breach of Contract by the Contractor.

11. EXTENSION OF TIME:

As soon as it is apparent that the Contract dates cannot be adhered to, an application shall be sent by the Contractor to the purchaser. If failure, on the part of the Contractor, to deliver the stores in proper time shall have arisen from any cause which the purchaser may admit as reasonable ground for an extension of the time (and his decision shall be final) he may allow such additional time as he considers it to be justified by circumstances, of the case without prejudice to the purchaser's right to recover liquidated damages under clause 10 thereof.

12. ERECTION OF PLANT & MACHINERY:

Wherever erection of a plant or machinery is the responsibility of the Contractor as per the terms of the Contract and in case the Contractor fails to carry out the erection as and when called upon to do so within the period specified by the purchaser, the purchaser shall have the right to get the erection done through any source of his choice. In such an event, the Contractor shall be liable to bear any additional expenditure that the purchaser is liable to incur towards erection. The Contractor shall, however, not be entitled to any gain due to such an action by the purchaser.

13. PAYMENT:

Contractor's bill will be passed for payment only after the stores have been received, inspected and accepted by the Purchaser.

14. MODE OF PAYMENT:

Normally payment will be made for the accepted stores within 30 days from the date of receipt of the materials.

15. RECOVERY OF SUM DUE:

Whenever any claim for the payment of, whether liquidated or not, money arising out of or under this Contract against the Contractor, the purchaser shall be entitled to recover such sum by appropriating in part or whole, the security deposited by the Contractor, if a security is taken against the Contract. In the event of the security being insufficient or if no security has been taken from the Contractor, then the balance or the total sum recoverable as the case may be, shall be deducted from any sum then due or which at any time thereafter may become due to the Contractor under this or any other Contract with the purchaser. Should this sum be not sufficient to cover the full amount recoverable, the Contractor shall pay to the purchaser on demand the remaining balance due. Similarly, if the purchaser has or makes any claim, whether liquidated or not, against the Contractor under any other Contract with the purchaser, the payment of all moneys payable under the Contract to the Contractor including the security deposit shall be withheld till such claims of the purchaser are finally adjudicated upon and paid by the Contractor.

16. INDEMNITY:

The Contractor shall warrant and be deemed to have warranted that all stores supplied against this Contract are free and clean of infringement of any Patent, Copyright or Trademark, and shall at all times indemnify the purchaser against all claims which may be made in respect of the stores for infringement of any right protected by Patent Registration of design or Trade mark and shall take all risk of accidents or damage which may cause a failure of the supply from whatever cause arising and the entire responsibility for sufficiency of all means used by him for the fulfilment of the contract.

17. ARBITRATION:

In the event of any question, dispute or difference arising under these conditions or any conditions contained in the Purchase Order or in connection with this Contract (except as to any matter the decision of which is specially provided for by these conditions), the same shall be referred to the sole arbitration of the Head of the Purchase office or some other person appointed by him. It will be no objection that the arbitrator is a Government servant, that he had to deal with matter to which the Contract relates or that in the course of his duties as Government servant he has expressed views on all or any other matters in dispute or difference. The award of the arbitrator shall be final and binding on the parties of this Contract.

If the arbitrator be the Head of the Centre/Unit –

(i) In the event of his being transferred or vacating his office by resignation or otherwise, it shall be lawful for his successor-in-office either to proceed with reference himself, or to appoint another person as arbitrator, or

(ii) In the event of his being unwilling or unable to act for any reason, it shall be lawful for the Head of the Centre/Unit to appoint another person as arbitrator.

If the arbitrator be a person appointed by the Head of the Purchase Office –

In the event of his dying, neglecting or refusing to act or resigning or being unable to act, for any reason, it shall be lawful for the Head of the Centre/Unit either to proceed with the reference himself or appoint another person as arbitrator in place of the outgoing arbitrator.

Subject as aforesaid the Arbitration & Conciliation Act 1996 and the rules thereunder and any statutory modifications thereof for the time being in force shall be deemed to apply to the arbitration proceedings under this Clause. The Arbitrator shall have the power to extend with the consent of the purchaser and the Contractor the time for making and publishing the award. The venue of arbitration shall be the place as purchaser in his absolute discretion may determine. Work under the Contract shall, if reasonably possible, continue during arbitration proceedings.

In the event of any dispute or difference relating to the interpretation and application for the provisions of the Contracts, such dispute or difference shall be referred by either party to Arbitration of one of the Arbitrations in the Department of Public Enterprises. The Arbitration Act 1996 shall not be applicable to arbitration under this clause. The award of the Arbitrator shall be binding upon the parties to the dispute provided however any party aggrieved by such award may make a further reference for setting aside or revision of the award to the Law Secretary, Department of Legal Affairs. Ministry of Law & Justice, Govt. of India. The parties to the dispute will share equally, the cost of arbitration as intimated by Arbitrator.

18. COUNTER TERMS AND CONDITION OF SUPPLIERS:

Where counter terms and conditions printed or cyclostyled conditions have been offered by the supplier, the same shall not be deemed to have been accepted by the Purchaser, unless specific written acceptance thereof is obtained.

19. SECURITY FOR PURCHASE OF MATERIALS:

Successful tenderer will have to furnish in the form of a bank guarantee or any other form as called for by the purchaser towards adequate security for the materials and properties provided by the Purchaser for the due execution of the Contract.

****

GOVERNMENT OF INDIA
DEPARTMENT OF SPACE
VIKARM SARABHAI SPACE CENTRE
PURCHASE UNIT III
RFF AREA
ISRO P.O, Thiruvananthapuram 695 022

Ph No. 0471-2563775,3609,3617
Fax: 0471-2562105
Email : spso_ prso@vssc.gov.in

INSTRUCTIONS TO TENDERERS AND TERMS & CONDITIONS (Foreign)

1. The Tenderers should submit quotations in duplicate in a sealed envelope, superscribing the Tender No. and due date of opening and complete in all respects with technical specifications, including pamphlets and catalogues.
2. A Proforma Invoice may also be given which should contain the following information:
a) The FOB/FCA value, the C & F value for import by Sea freight / Air freight up to and for air parcel post up to ..... should be separately indicated.
b) **Agency Commission**: The amount of commission included in the price and payable to the Indian Agent of the Contractor shall be paid directly to the Indian Agent by the Purchaser in equivalent Indian Rupees on the basis of an Invoice from him applying T.T. buying rate of exchange ruling on the date of placement of the Purchase Order and which shall not be subject to any further exchange variations. This payment will be released to the Indian Agent immediately after Customs clearance of the goods in India.
c) The Contractor shall invoice only for the net amount payable to him, after deducting the amount of Agency Commission included in the invoice which will be paid to the Indian Agent directly by the Purchaser. However, the Contractor's invoice should separately reflect the amount of commission payable to his Indian Agent.
d) The earliest delivery period and country of origin of the Stores.
e) Banker's name, address, telephone/fax Nos. & e-Mail ID of the Contractor.
f) The approximate net and gross weight and dimensions of packages / cases.
g) Recommended spares for satisfactory operation for a minimum period of one year.
h) Details of any technical service, if required for erection, assembly, commissioning and demonstration.
3. The FOB/FCA and C & F prices quoted should be inclusive of all taxes, levies,duties arising in the tenderer's country.
4. The offer should be valid for a minimum period of 120 days from the due date of opening of the tender.
5. Samples, if called for, should be sent free of all charges.
6. Late and delayed tenders will not be considered. Quotations by cable must be followed by detailed offers.
7. Offers made by Indian Agents on behalf of their Principals, should be supported by the proforma invoice of their Principals.
8. The details of Import Licence will be furnished in the Purchase Order.
9. The authority of person signing the tender, if called for, shall be produced.
10. Instructions / Operation Manual containing all assembly details including wiring diagrams should be sent wherever necessary in duplicate. All documents / correspondence should be in English language only.
11. The Purchaser reserves the right to accept or reject the lowest or any offer in whole or part without assigning any reason.
12. It is expressly agreed that the acceptance of the Stores Contracted for is subject to final approval in writing by the Purchaser.
13. a) Part shipment is not allowed unless specifically agreed to by us.
b) As far as possible stores should be despatched by Indian Flag Vessels / Air India through any Agency nominated by us.
14. Inspection / Test Certificate should be provided for the goods after testing it thoroughly at the Contractor's works. If any Inspection by Lloyds or any other testing agency is considered necessary, it shall be arranged by Contractors.
15. Where erection or assembly or commissioning is a part of the Contract, it should be done immediately on notification. The Contractor shall be responsible for any loss/damage sustained due to delay in fulfilling this responsibility.
16. For items having shelf life, those with maximum shelf life should be supplied if order is placed.

II. TERMS AND CONDITIONS

1. DEFINITIONS:
(a) The term 'Purchaser' shall mean the President of India or his successors or assignees.
(b) The term 'Contractor' shall mean, the person, firm or company with whom or with which the order for the supply of stores is placed and shall be deemed to include the Contractor's Successors, representatives, heirs, executors and administrators unless excluded by the Contract.
(c) The term 'Purchase Order' shall mean the communication signed on behalf of the Purchaser by an officer duly authorised intimating the acceptance on behalf of the Purchaser on the terms and conditions mentioned or referred to in the said communication accepting the Tender or offer of the Contractor for supply of stores of plant, machinery or equipment of part thereof.
(d) The term 'Stores' shall mean what the Contractor agrees to supply under the Contract as specified in the Purchase Order.
2. PRICES:
Tenders offering firm prices will be preferred. Where a price variation clause is insisted upon by a tenderer, quotations with a reasonable ceiling should be submitted. Such offers should invariably be supported by the base price taken into account at the time of tendering and also the formula for any such variations.
3. TERMS OF PAYMENT:
3.1 Being a Department of the Government of India, the normal terms of payment are by Sight Draft. However other terms of payment like establishment of Letter of Credit may be considered by the Purchaser on such terms and conditions as may be agreed upon.

Contd....2

3.2 The Sight Draft / Letter of Credit will be operative on presentation of the undermentioned documents:
a) Original Bill of Lading / Airway Bill
b) Commercially certified invoices describing the stores delivered, quantity, unit rate and their total value, in triplicate. The invoice should indicate the discounts, if any, and Agency Commission separately.
c) Packing List showing individual dimensions and weight of packages.
d) Country of Origin Certificate in duplicate.
e) Test Certificate.
f) Declaration by the Seller that the contents in each case are not less than those entered in the invoices and the quality of the Stores are guaranteed as per the specifications asked for by the Purchaser.
g) Warrantee and guarantee Certificate/s vide Clause 20 herein below
4. IMPORTANT LICENCE:
Reference to Import License No. & date and Contract number & date shall be prominently indicated in all the documents vide para 3.2
5. DEMURRAGE:
Supplier shall bear demurrage charges, if any, incurred by the purchaser due to delayed presentation of shipping documents as prescribed in para 3.2 to the bankers within a reasonable time (say within 10-12 days) from the date of bill of lading for sea consignments and within 3-4 days from the date of Air Way Bill for air consignments.
6. ADDRESS OF INDIAN AGENTS:
…….
7. GUARANTEED TIME DELIVERY:
The time for and the date of delivery stipulated in the Purchase Order shall be deemed to be the essence of the Contract. Delivery must be completed within the date specified therein.
8. INSPECTION AND ACCEPTANCE TEST:
8.1 The Purchaser's representatives shall also be entitled at all reasonable times during manufacture to inspect, examine and test on the Contractor's premises the material and workmanship of all stores to be supplied under this Contract and if part of the said stores is being manufactured on other premises, the Contractor shall obtain for the purchaser's representative permission to inspect, examine and test as if the equipment were being manufactured on the Contractor's premises. Such inspection, examination and testing shall not release the Contractor from the obligations under this Contract.
8.2 For tests on the premises of the Contractor or of any of his sub- Contractors, the Contractor shall provide free of cost assistance, labour, material, electricity, fuel and instruments as may be required or as may be reasonably needed by the purchaser's representative to carry out the tests efficiently.
8.3 When the stores have passed the specified test, the purchaser's representative shall furnish a certificate to the effect in writing to the Contractor. The Contractor shall provide copies of the test/s certificates to the purchaser as may be required.
9. MODE OF DESPATCH:
Generally, stores should be despatched through Indian Flagged Vessel / Air India or through any other Agency nominated by the purchaser. A copy of the invoice and packing list should invariably be kept inside each of the packages.
10. PORT OF ENTRY:
Thiruvananthapuram/Chennai/Mumbai/Hyderabad/Bangalore/……
……..
11. CONSIGNEE:
Purchase & Stores Officer, Stores, _____,
12. SHIPPING MARKS.
The mark on the shipping documents such as invoice, bill of lading and on the
packages should be as follow:
PURCHASE ORDER NO. ……..
DATED …….
GOVERNMENT OF INDIA
DEPARTMENT OF SPACE
..... (name of the Centre/Unit)
Destination: ..... &
Port of Entry: .....
13. INSURANCE OF THE STORES:
The necessity or otherwise of insurance will be as indicated in the Purchase Order.
14. CONTRACTOR'S DEFAULT LIABILITY:
14.1 The purchaser may upon written notice of default to the Contractor terminate the Contract in whole or in part in circumstances detailed hereunder:
a) If in the judgement of the Purchaser the Contractor fails to make delivery of Stores within the time specified in the Contract/agreement or within the period for which extension has been granted by the Purchaser to the Contractor.
b) If in the judgment of the Purchaser the Contractor fails to comply with any of the other provisions of this Contract.
15. In the event the Purchaser terminates the Contract in whole or in part as provided in Clause 14 the Purchaser reserves the right to Purchase, upon such terms and in such a manner as he may deem appropriate, stores similar to that terminated and the Contractor shall be liable to the Purchaser for any additional costs for such similar stores and/or for liquidated damages for delay as defined in Clause 19 until such reasonable time as may be required for the final supply of stores.
15.1 If this Contract is terminated as provided in Clause 14 the Purchaser in addition to any other rights provided in this Article, may require the Contractor to transfer title and deliver to the Purchaser under any of the following clauses in the manner and as directed by the Purchaser:

Contd....3

a) Any completed stores.

b) Such partially completed stores, drawing, information and Contract rights (hereinafter called manufacturing material) as the Contractor has specifically produced or acquired for the performance of the Contract as terminated. The Purchaser shall pay to the Contractor the Contract price for completed stores delivered to and accepted, by the purchaser and for manufacturing material delivered and accepted.

15.2 In the event the Purchaser does not terminate the Contract as provided in Clause 14, the Contractor shall continue the performance of the Contract in which case he shall be liable to the purchaser for liquidated damages for delay as set out in Clause 19 until the stores are accepted.

16. REPLACEMENT:

If the stores or any portion thereof is damaged or lost during transit, the Purchaser shall give notice to the Contractor setting forth particulars of such stores damaged or lost during transit. The replacement of such stores shall be effected by the Contractor within a reasonable time to avoid unnecessary delay in the intended usage of the Stores. In case the purchaser agrees, the price towards replacement items shall be paid by the purchaser on the basis of
original price quoted in the tender or as reasonably worked out from the tender.

17. REJECTION :

In the event that any of the stores supplied by the Contractor is found defective in material or workmanship or otherwise not in conformity with the requirements of the Contract specifications, the purchaser shall either reject the stores or request the Contractor, in writing, to rectify the same. The Contractor, on receipt of such notification, shall either rectify or replace the defective stores free of cost to the purchaser. If the Contractor fails to do so,
the purchaser may at his option either –

a) replace or rectify such defective stores and recover the extra cost so involved from the Contractor, or

b) terminate the Contract for default as provided under clause 14 above, or

c) acquire the defective stores at a reduced price considered equitable under the circumstances. The provision of this article shall not prejudice the Purchaser's rights under clause 19.

18. EXTENSION OF TIME:

If the completion of supply of stores is delayed due to reason of *force majeure*such as acts of god, acts of public enemy, acts of Government, fires, floods,epidemics, quarantine restriction, strikes, freight embargoes, etc., the Contractor shall give notice within 15 days to the purchaser in writing of his claim for an extension of time. The purchaser on receipt of such notice after verification, if necessary, may agree to extend the Contract delivery date as
may be reasonable but without prejudice to other terms and conditions of the Contract.

19. DELAY IN COMPLETION / LIQUIDATED DAMAGES:

If the Contractor fails to deliver the stores within the time specified in the Contract or any extension thereof, the purchaser shall recover from the Contractor as liquidated damages a sum of one-half of one percent (0.5 percent) of the Contract price of the undelivered stores for each calendar week of delay. The total liquidated damages shall not exceed ten percent (10 percent) of the Contract price of the unit or units so delayed. Stores will be deemed to have been delivered only when all their component parts are also delivered. If certain components are not delivered in time, the stores will be considered as delayed until such time as the missing parts are delivered.

20. GUARANTEE & REPLACEMENT:

a) The Contractor shall guarantee that the stores supplied shall comply fully with the specifications laid down for material, workmanship and performance.

b) For a period of twelve months after the acceptance of the stores, if any defects are discovered therein or any defects therein are found to have developed under proper use arising from faulty materials, design or workmanship, the Contractor shall remedy such defects at his own cost provided he is called upon to do so within a period of 14 months from the date of acceptance thereof by the Purchaser who shall state in writing in what respect the stores or any parts thereof are faulty.

c) If in the opinion of the purchaser it becomes necessary to replace or renew any defective stores, such replacements or renewals shall be made by the Contractor free of all costs to the purchaser provided the notice informing the Contractor of the defect is given by the purchaser in this regard within the said period of 14 months from the date of acceptance thereof.

d) Should the Contractor fail to rectify the defects, the purchaser shall have the right to reject or repair or replace at the cost of the Contractor the whole or any portion of the defective stores.

e) The decision of the Purchaser, notwithstanding any prior approval or acceptance or inspection thereof on behalf of the purchaser, as to whether or not the stores supplied by the Contractor are defective or any defects has developed within the said period of 12 months or as to whether the nature of the defects requires renewal or replacement shall be final, conclusive and binding on the Contractor.

f) To fulfill guarantee conditions outlined in Clause 20 (a) to (e) above, the Contractor shall, at the option of the purchaser, furnish a Bank Guarantee (as prescribed by the purchaser - Bank Guarantee format enclosed) from a Bank approved by the purchaser for an amount equivalent to 10% of the value of the Contract along with first shipment documents. On the performance and completion of the Contract in all respects, the Bank Guarantee will be returned to the Contractor without any interest.

g) All the replacement stores shall also be guaranteed for a period of 12 months from the date of arrival of stores at purchaser's site.

h) Even while the 12 months guarantee applies to all stores, in case where a greater period is called for by our specifications, then such a specification shall apply, and in such cases, the period of 14 months referred to in Clause 20 (b) and (c) shall be asked for guarantee period plus two months.

21 REQUIREMENT OF ADDITIONAL NUMBERS OF THE STORES/SPARE PARTS ORDERED:

The Contractor shall also undertake the supply of additional number of items covered by the order as considered necessary by the purchaser at a later date, the actual price to be paid shall be mutually agreed to after negotiations.

Contd....4

22. PACKING:

a) The Contractor wherever applicable shall pack and crate all stores for sea /air shipment as applicable in a manner suitable for export to a tropical humid climate, in accordance with internationally accepted export practices and in such a manner so as to protect it from damage and deterioration in transit by road, rail or sea for space qualified stores. The Contractors shall be held responsible for all damages due to improper packing.

b) The Contractor shall ensure that each box / unit of shipment is legible and properly marked for correct identification. The failure to comply with this requirement shall make the Contractor liable for additional expenses involved.

c) The Contractor shall notify the purchaser of the date of shipment from the port of embarkation as well as the expected date of arrival of such shipment at the designated port of arrival.

d) The Contractor shall give complete shipment information concerning the weight, size, content of each packages, etc.

e) Transshipment of equipment shall not be permitted except with the written permission of the purchaser.

f) Apart from the despatch documents negotiated through Bank, the following documents shall also be airmailed to the purchaser within 7 days from the date of shipment by sea and within 3 days in case of air-consignments:

a) Commercial Bill of Lading / Air Way Bill / Post parcel Receipt. (Two non-negotiable copies)

b) Invoice (3 copies)

c) Packing List (3 copies)

d) Test Certificate (3 copies)

e) Certificate of Origin.

The Contractor shall also ensure that one copy of the packing list is enclosed in each case.

23. ARBITRATION:

If at any time any question, dispute or difference whatsoever shall arise between the purchaser and the Contractor upon or in connection with this Contract, either party may forthwith give to the other notice in writing of the existence of such question, dispute or difference and the same shall be referred to the adjudication of two arbitrators, one to be nominated by purchaser, other by a Contractor and in the event of any difference of opinion,

the arbitrators will refer the matter to the umpire. The arbitration shall be conducted in accordance with the rules and procedure for arbitration of the International Chamber of Commerce at Paris. The expenses of the arbitrators and umpire shall be paid as may be determined by them. However, the venue of such arbitration should be in India.

24. LANGUAGE AND MEASURES:

All documents pertaining to the Contract including specification, schedule, notice, correspondence, operating and maintenance instructions, drawings or any other writings shall be written in English language. The metric system of measurement shall be used exclusively in the Contract.

25. INDEMNITY:

The Contractor shall warrant and be deemed to have warranted that all Stores supplied against this Contract are free and clean of infringement of any patent,copyright or trade mark and shall at all times indemnify the purchaser against all claims which may be made in respect of stores for infringement of any right protected by Patent, Registration of design or Trade Mark, and shall take all risk of accident or damage which may cause a failure of the supply from whatever cause arising and the entire responsibility for the sufficiency of all the means used by him for the fulfillment of the Contract.

26. COUNTER TERMS AND CONDITIONS OF SUPPLIERS:

Where counter terms and conditions/printed or cyclostyled conditions have been offered by the supplier, the same shall not be deemed to have been accepted by the purchaser unless specific written acceptance thereof is obtained.

27. SECURITY INTEREST:

On each item to be delivered under this Contract, including an item of work in progress in respect of which payments have been made in accordance with the terms of the Contract, purchaser shall have a security interest in such items which shall be deemed to be released only at the time when the applicable deliverable item is finally accepted and delivered to the purchaser in accordance with the terms of the Contract. Such security interest of the

purchaser shall constitute a prior charge as against any other charge or interest created in respect of such items by any entity.

28. BANK CHARGES:

While the purchaser shall bear the bank charge payable to his Bankers (State Bank of India), the Contractor shall bear the Bank charges payable to his Bankers including the cheques towards advising amendment commissions.

29. TRAINING:

The Contractor shall, if required by the purchaser, provide facilities for the practical training of Purchaser's engineering / technical personnel from India and for their active association on the manufacturing processes throughout the manufacturing period of the Contract / stores, number of such personnel to be mutually agreed upon.

30. APPLICABLE LAW:

The Contract shall be interpreted, construed and governed by the laws of India.

GOVERNMENT OF INDIA
DEPARTMENT OF SPACE
VIKRAM SARABHAI SPACE CENTRE
PURCHASE UNIT-III,PRSO,RFF AREA
THIRUVANANTHAPURAM 695022
KERALA, INDIA

Ph No: 0471-2563775,3609,3617
Fax 0471-2562105
Email: spso_prso@vssc.gov.in

Date :.

INVITATION TO TENDER

Our Ref No : A510 **2019-005333-01**

M/s 000000

Tender Due: **Hrs ISTon**

Opening : **Hrs ISTon**

Dear Sirs,

Please submit your sealed quotation , in the Tender Form enclosed here along with the descriptive catalogues / pamphlets /literature ,superscribed with Our Ref.No. and Due Date for the supply of the following items as per the terms & conditions mentioned in Annexure(Form No: Attached)

S.No.	Description of Items with Specifications	Unit	Quantity
1	Supply, installation & Commissioning of Bio-Gas Plant for APEP Guest House in ISRO Housing Colony Premises and for CISF Barrack in CISF Housing Colony premises with PULVARISER.	NO	2

DELIVERY AT: APEP

MODE OF DESPATCH BY ROAD

DUTY EXEMPTIONS -

SPECIAL INSTRUCTIONS PUBLIC TENDER

SPECIFIC TERMS Attached

INSTRUCTIONS TO TENDERERS:

1) Specifications as per Annexure-I.
2) Commercial Compliance Matrix as per Annexure-II.
3) Form No.23 as per Annexure-III.
4) Specific Terms and Conditions as per Annexure-IV.
5) Form No. 20 & 22 attached.

For and on behalf of the President of India
The Purchaser

Annexure-I

Supply, Installation & Commissioning of Bio-Gas Plant for APEP Guest House in ISRO Housing Colony Premises and for CISF Barrack in CISF Housing Colony premises with PULVARISER

SPECIFICATION:

a. Design: Portable FRP Bio-gas plant with water jacket.
b. Treatment Capacity: 25 KG solid waste treatment / day.
c. Gas Line: PVC Pipe channeled connection with moisture trap to the kitchen.
d. Industrial type heavy duty single burner bio-gas stove with ISI certification.
e. To be supplied along with a PULVARISER / GARBAGR CRUSHER unit suitable for bio-gas unit with treatment capacity of 25 KG of solid waste/day with necessary accessories.

NOTE:

1 Warranty for a period of minimum one year from the date of Supply, Installation & Commissioning. The party shall do necessary maintenance (minimum 3 visits – once in four months) during warranty period to ensure the system performance during the warranty period.
2 The party has to provide necessary cow dung for initial charging of the plant.
3 Party shall be willing to carry out AMC once in 3 months after warranty period is over. Rate should be quoted by the party for each visit / quarter for a period of 2 years. Payment shall be done in pro-rata basis. Quarterly AMC shall include the following works and shall ensure the bio-gas plant is working satisfactorily including;
   - General Performance of the plant.
   - Condition of the digester system.
   - Conditions of the valves, pipelines, gas stove, etc.
4 The scope of work include supply, installation & commissioning of the plants at our site.
5 The party should be willing to arrange a demonstration at site regarding the operation & day to day maintenance of the plants.
6 The party should have adequate experience in supply, installation & commissioning of similar plants.
7 Payment after installation, acceptance & commissioning of both the plants and against submission of 10% PBG valid till warranty period.

ANNEXURE-II

COMMERCIAL COMPLIANCE MATRIX TO BE FILLED AND SUBMITTED BY THE VENDORS ALONGWITH THEIR QUOTATION (MANDATORY) :

As per the latest Govt. rules and CVC guidelines, acceptance of Liquidated Damage(LD) clause for delayed delivery, Guarantee/Warranty terms, submission of Performance Bank Guarantee(PBG) and submission of Security Deposit are mandatory. Please confirm your acceptance.			
	Yes	No	Deviation
1. Warranty for a period of minimum one year from the date of Supply, Installation & Commissioning.			
2. Performance Bank Guarantee (PBG): In the event of placement of order, you have to submit a Performance Bank Guarantee for 10% of the order value, obtained from a Nationalised/Scheduled Bank, which shall be valid beyond 2 months from the expiry of Warranty period. Pl. confirm your acceptance.			
3. Liquidated Damage (LD): The Delivery Date mentioning in the Contract/order will be the essence of the Contract. You shall strictly adhere to the delivery schedule mentioned in your quotation. Pl. confirm acceptance of LD clause and that you will strictly adhere to the delivery schedule.			
4. Payment Terms (in Indigeneous case): Our normal payment terms is "within 30 days after receipt/installation and acceptance of item at our site". Pl. accept the same and confirm. Payment Terms (in Import case): Our normal payment terms are Sight Draft. Pl. accept the same and confirm.			
5. Security Deposit (SD) (If the value of the ordered item exceeds Rs.5.00 lakhs) : In the event of placement of order, you have to submit a Security Deposit by means of a Bank Guarantee/Fixed Deposit Receipt for 10% of the order value, along with your Order Acceptance. Pl. confirm your acceptance. MSME units are not exempted from Security Deposit.			
6. P.O. Ordering address with details of contact person, Ph. No, email ID etc.			
7. Whether registered in PFMS? If yes, provide PFMS Unique Code. If not, please provide the following details: IFSC Code, Bank details, copy of Personalized cheque leaf in the name of the Purchase Vendor or NEFT Mandate form duly endorsed by the Bank of the Vendor. Necessary supporting documents may be uploaded. (Applicable only to Indian VENDORS)			

Note: Acceptance of Guarantee/Warranty, PBG, LD Clause and submission of Security Deposit are compulsory. Quotations not accepting these conditions will not be considered.

Form No. DOS:PM:23

GOVERNMENT OF INDIA
DEPARTMENT OF SPACE

VIKRAM SARABHAI SPACE CENTRE
PURCHASE UNIT - III,
PCM/PRSO PURCHASE, RFF AREA, ISRO P.O
THIRUVANANTHAPURAM - 695 022

Tel. 0471 2563775, 3617, 3609 **Fax : 0471 2562105**
Email : spso_prso@vssc.gov.in

TENDER FORM

Tender No. : .....
Due on : .....
Ref. No. : .....
Date : .....

From:

.....
.....
.....
.....

To:

The Sr.Purchase & Stores Officer
Vikram Sarabhai Space Centre
Purchase Unit - III
PCM/PRSO Purchase
RFF Area, ISRO P.O
Thiruvananthapuram -695 022

Dear Sir,

1. I/We hereby offer to supply the stores detailed below at the price hereunder quoted and agree to hold this offer open till..... I/we shall be bound to supply the stores hereby offered upon the issue of the Purchase Order communicating the acceptance thereof on or before the expiry of the last mentioned date. You are at liberty to accept any one or more of the items of stores tendered for or any portion of any one or more of the items of such stores. I/We, notwithstanding that the offer in this tender has not been accepted in whole, shall be bound to supply to you such items and such portion or portions of one or more of the items as may be specified in the said Purchase Order communicating the acceptance:

Sl.No.	Description	Quantity	Unit	Rate(₹)	Delivery Date

Note: All the rates should be given both in figures and words

Place at which delivery will be made	
Date by which the ordered item/s will be supplied	

2. I/We have understood the items of the tender annexed to the invitation to tender and have thoroughly examined the specifications/drawing and/or pattern quoted or referred to herein and am/are fully aware of the nature of the stores required and my/our offer is to supply the stores strictly in accordance with the requirements subject to the terms and conditions stipulated in the enquiry and contained in the Purchase Order communicating the acceptance of this tender either in whole or in part.

Signature of Tenderer

Date: ..... *(Seal)*

Annexure-IV

Specific terms and conditions to the Tender:-

1. Please submit the Technical Details / Catalogue / Data Sheets.
2. The offer should be valid for a period of 90 days from the date of opening of Tender.
3. **Tender will be opened at the scheduled due date & time in presence of attending tenderers. Interested parties can attend the Tender opening to know the details at their own cost. No further intimation will be sent to you in this regard. [Presence not mandatory to consider the quote].**
4. **Please send the quotations ONLY in 'SEALED COVER' indicating our tender enquiry No. and due date by speed post so as to reach us on or before the due date & time. VSSC will not be responsible for any postal delays.**
5. **E- mail/ fax quotations 'WILL NOT BE ACCEPTED'.**
6. **We are eligible for partial exemption of IGST vide Notification No: 47/2017-Integrated Tax (Rate) dtd 14/11/2017 issued by Dept. of Revenue, Ministry of Finance(IGST@5%).**
   Also we are eligible for partial exemption of GST vide Notification No: 45/2017-Central Tax (Rate) dtd 14/11/2017 issued by Dept. of Revenue, Ministry of Finance & Notification No.169/2017/TAXES dated 15.11.2017 issued by Government of Kerala, Taxes(B) Department (GST@5%).
   Necessary Certificate will be issued by us. Please submit your quotations accordingly.
7. **As per Notification No. 5/2018-CUSTOMS DTD. 25/01/2018, We are eligible for concessional payment of customs duty and IGST. Hence CD & IGST element shall be specified separately in the quotation.**
8. **All Tax invoices issued by suppliers/service providers on or after July 01, 2017 shall invariably bear their GST Registration No (GSTIN) and the applicable GST rates. In the absence of which, the invoices shall not be processed for payment.**
9. Our standard delivery term is FOR, APEP, ALUVA. In case any vendor offers delivery term of Ex-works, Packing and Forwarding charges if any should be indicated separately either as a percentage of the quoted rate or as a Lump sum amount.
10. Our standard payment term is 100% within 30 days for indigenous orders and Sight Draft for foreign orders.
11. **In case if any Bidder is submitting their Offer on HIGH SEA SALES BASIS:** then the Indian Trader shall submit the following documents **mandatorily along with their offer.**
    a. The Import Export Code of the Indian Trader
    b. Bank Authorization Code of the Indian Trader
    c. GSTIN of the Indian Trader

    Likewise, while executing the Purchase Order/Contract; the Indian Trader shall mandatorily submit the following:
    a. High Sea Sale Agreement.
    b. Invoice pertaining to the Indian Trader in INR and the invoice of the foreign vendor in foreign currency.
12. **In case of Foreign/Import Tenders:**
    a. The bidder shall clearly mention the full ordering address in capital letters.
    b. The bidder shall clearly mention their banker's address including their SWIFT code compulsorily.
    c. Any change of address shall be compulsorily supported by Documentary proof issued either by Governmental agencies or by Chamber of Commerce.
    d. Foreign Principal's Proforma Invoice/quote indicating the Agency Commission payable to the Indian Agent and the nature of after sales service to be rendered by the Indian Agent.

e. Copy of the Agency Agreement between the Foreign Principal and the Indian Agent, and the precise relationship between them their mutual interest in the business.
f. Registration and Item empanelment of the Indian Agent.

13. **Liquidated Damages** – The delivery period quoted should be realistic. The delivery period so quoted and mentioned in the order is the essence of the order/contract. In case of delay in delivery of material as per the delivery schedule, Liquidated Damage @ 0.5% per week or part thereof on the undelivered portion subject to a maximum of 10% of the contract value shall be levied. Wherever, installation and commissioning is also involved, the supply will be deemed to have been completed only when the entire Stores is supplied, installed and accepted.
14. **Performance Bank Guarantee : -** Wherever products offered carry warranty, the warranty should be for Two years or as per manufacturer's standard warranty term. Against such cases, please confirm submission of Performance Bank Guarantee. The Performance Bank Guarantee should be for 10% of the order value covering the warranty period obtained from any Scheduled Bank on Rs.200/- Non Judicial Stamp Paper and should be valid beyond 2 months from the completion of the warranty period. Alternately vendors can request for withholding 10% payment till completion of the warranty period.
15. **Security Deposit: -** Wherever the offer value is Rs. 5.00 Lakhs or above, the successful tenderer should submit Security Deposit @ 10% of the order value by way of Bank Guarantee / FD Receipt. The Bank Guarantee shall be obtained from any Scheduled Bank on Rs.200/- Non Judicial Stamp Paper and should be valid beyond 2 months from the completion of all contractual obligations.

    Note: - Clause No. 12,13 & 14 are mandatory and offers of the vendors who have not agreed for the above conditions will be excluded from the procurement process. Micro and Small Vendors are not exempted from the submission of Security Deposit.
16. **EMD**: The vendors who are not registered with VSSC, shall submit an EMD(Earnest Money Deposit) or Bid Security in the form of DD/Banker's Cheque/Fixed Deposit Receipt for Rs.10,000/-. The EMD of the unsuccessful vendor will be returned without any interest within 30 days from the date of finalization. Foreign vendors, registered vendors or vendors who have already applied for renewal of registration, Central PSUs/PSEs/Autonomous Bodies/MSMEs etc., shall be exempted from payment of EMD. Vendors seeking exemption from payment of EMD shall submit necessary proof like registration number (vendor code), etc. The quotation submitted by unregistered vendor without EMD will not be considered. The EMD submitted by unregistered vendors will be forfeited in the case of withdrawal of quotation or amendments in quotation or any such deviation in a later period.
17. In order to avail of the benefits extended to by Govt. of India to the Micro and Small Sectors, please submit attested copy of the valid Entrepreneur Memorandum Part-II signed by the General Manager, District Industries Centre / Udyog Adhar/ NSIC Registration Certification along with your offer.
18. If any bidder submits forged / false document along with the tender, offer of such vendors will be summarily rejected and such bidders will be blacklisted for all future tenders.
19. Wherever samples are required to be submitted along with the quotation, offer without sample will not be considered.
20. We are completely switching over to e-procurement mode. If you have not empanelled in the ISRO e-Procurement portal, please log on to https:// eprocure.isro.gov.in and complete the registration/ Empanelment process.

**

Form No. DOS:PM:20

GOVERNMENT OF INDIA
DEPARTMENT OF SPACE
VIKRAM SARABHAI SPACE CENTRE
PURCHASE UNIT - III,
PCM/PRSO PURCHASE, RFF AREA, ISRO P.O
THIRUVANANTHAPURAM - 695 022
Tel. 0471 2563775, 3617, 3609 **Fax : 0471 2562105**
Email : spso_prso@vssc.gov.in

INSTRUCTIONS TO TENDERERS AND TERMS & CONDITIONS OF TENDER

I. INSTRUCTIONS TO TENDERERS

1. Tenders should be sent in sealed envelopes superscribing the relevant tender No, and the due date of opening. Only one tender should be sent in each envelope.
2. Late tenders and delayed tenders will not be considered.
3. Sales Tax and/or other duties/levies legally leviable and intended to be claimed should be distinctly shown separately in the tender.
4. As a Government of India Department, this office is exempted from payment of Octroi and similar local levies.Tenderers shall ensure that necessary Exemption Certificates are obtained by them from the Purchase Officer concerned to avoid any payment of such levies.
5. (a) **Your quotation should be valid for 90 days from the date of opening of the tender.**

(b) Prices are required to be quoted according to the units indicated in the annexed tender form. When quotations are given in terms of units other than those specified in the tender form, relationship between the two sets of units must be furnished.

6. Preference will be given to those tenders offering supplies from ready stocks and on the basis of FOR destination/delivery at site.
7. (a) All available technical literature, catalogues and other data in support of the specifications and details of the items should be furnished along with the offer.

   (b) Samples, if called for, should be submitted free of all charges by the tenderer and the Purchaser shall not be responsible for any loss or damage thereof due to any reason whatsoever. In the event of non-acceptance of tender, the tenderer will have to remove the samples at his own expense.

   (c) Approximate net and gross weight of the items offered shall be indicated in your offer. If dimensional details are available the same should also be indicated in your offer.

   (d) Specifications: Stores offered should strictly confirm to our specifications. Deviations, if any, should be clearly indicated by the tenderer in his quotation. The tenderer should also indicate the Make/Type number of the stores offered and provide catalogues, technical literature and samples, wherever necessary, along with the quotations. Test Certificates, wherever necessary, should be forwarded along with supplies. Wherever options have been called for in our specifications, the tenderer should address all such options. Wherever specifically mentioned by us, the tenderer could suggest changes to specifications with appropriate response for the same.
8. The purchaser shall be under no obligation to accept the lowest or any tender and reserves the right of acceptance of the whole or any part of the tender or portions of the quantity offered and the tenderers shall supply the same at the rates quoted.
9. Corrections, if any, must be attested. All amounts shall be indicated both in words as well as in figures. Where there is difference between amount quoted in words and figures, amount quoted in words shall prevail.
10. The tenderer should supply along with his tender, the name of his bankers as well as the latest Income-Tax clearance certificate duly countersigned by the Income-Tax Officer of the Circle concerned under the seal of his office, if required by the Purchaser.
11. The Purchaser reserves the right to place order on the successful tenderer for additional quantity up to 25% of the quantity offered by them at the rates quoted.
12. The authority of the person signing the tender, if called for, should be produced.

II. TERMS & CONDITIONS OF TENDER

1. **DEFINITIONS:**

   (a) The term 'Purchaser' shall mean the President of India or his successors or assigns.

   (b) The term 'Contractor' shall mean, the person, firm or company with whom or with which the order for the supply of stores is placed and shall be deemed to include the Contractor's successors, representative, heirs, executors and administrators unless excluded by the Contract.

(c) The term 'Stores' shall mean what the Contractor agrees to supply under the Contract as specified in the Purchase Order including erection of plants & machinery and subsequent testing, should such a condition is included in the Purchase Order.

(d) The term 'Purchase Order' shall mean the communication signed on behalf of the Purchaser by an Officer duly authorised intimating the acceptance on behalf of the Purchaser on the terms and conditions mentioned or referred to in the said communication accepting the tender or offer of the Contractor for supply of stores or plant, machinery or equipment or part thereof.

2. **PRICES:**

Tender offering firm prices will be preferred. Where a price variation clause is insisted upon by a tenderer, quotation with a reasonable ceiling should be submitted. Such offers should invariably be supported by the base price taken into account at the time of tendering and also the formula for any such variation/s.

3. **SECURITY DEPOSIT:**

On acceptance of the tender, the Contractor shall, at the option of the Purchaser and within the period specified by him, deposit with him, in cash or in any other form as the Purchaser may determine, security deposit not exceeding ten percent of the value of the Contract as the Purchaser shall specify. If the Contractor is called upon by the Purchaser to deposit, 'Security' and the Contractor fails to provide the security within the period specified, such failure shall constitute a breach of the Contract, and the Purchaser shall be entitled to make other arrangements for the re-purchase of the stores Contracted at the risk of the Contractor in terms of Sub-Clause (ii) and (iii) of clause 10(b) hereof and/or to recover from the Contractor, damages arising from such cancellation.

4. **GUARANTEE & REPLACEMENT:**

(a) The Contractor shall guarantee that the stores supplied shall comply fully with the specifications laid down, for material, workmanship and performance.

(b) For a period of twelve months after the acceptance of the stores, if any defects are discovered therein or any defects therein found to have developed under proper use, arising from faulty stores design or workmanship, the Contractor shall remedy such defects at his own cost provided he is called upon to do so within a period of 14 months from the date of acceptance thereof by the purchaser who shall state in writing in what respect the stores or any part thereof are faulty.

(c) If, in the opinion of the purchaser, it becomes necessary to replace or renew any defective stores such replacement or renewal shall be made by the Contractor free of all costs to the purchaser, provided the notice informing the Contractor of the defect is given by the purchaser in this regard within the said period of 14 months from the date of acceptance thereof.

(d) Should the Contractor fail to rectify the defects, the purchaser shall have the right to reject or repair or replace at the cost of the Contractor the whole or any portion of the defective stores.

(e) The decision of the purchaser notwithstanding any prior approval or acceptance or inspection thereof on behalf of the purchaser, as to whether or not the stores supplied by the Contractor are defective or any defect has developed within the said period of 12 months or as to whether the nature of the defects requires renewal or replacement, shall be final, conclusive and binding on the Contractor.

(f) To fulfil guarantee conditions outlined in clause 4 (a) to (e) above, the Contractor shall, at the option of the purchaser, furnish a Bank Guarantee (as prescribed by the purchaser) from a Bank approved by the purchaser for an amount equivalent to 10% of the value of the Contract along with first shipment documents. On the performance and completion of the Contract in all respects, the Bank Guarantee will be returned to the Contractor without any interest.

(g) All the replacement stores shall also be guaranteed for a period of 12 months from the date of arrival of the stores at purchaser's site.

(h) Even while the 12 months guarantee applies to all stores, in case where a greater period is called for by our specifications then such a specification shall apply in such cases the period of 14 months referred to in para

4 (b) & (c) shall be the 'asked for' guarantee period plus two months.

5. **PACKING, FORWARDING & INSURANCE:**

The Contractor will be held responsible for the stores being sufficiently and properly packed for transport by rail, road, sea or air to withstand transit hazards and ensure safe arrival at the destination. The packing and marking of packages shall be done by and at the expense of the Contractor. The purchaser will not pay separately for transit insurance, all risks in transit being exclusively of the Contractor and the Purchaser shall pay only for such stores as are actually received in good condition in accordance with the Contract.

6. **DESPATCH:**

The Contractor is responsible for obtaining a clear receipt from the Transport Authorities specifying the goods despatched. The consignment should be despatched with clear Railway Receipt/Lorry Receipt. If sent in any other mode, it shall be at the risk of the Contractor. Purchaser will take no responsibility for short deliveries or wrong supply of goods when the same are booked on 'said to contain' basis. Purchaser shall pay for only such stores as are actually received by them in accordance with the Contract.

7. **TEST CERTIFICATE:**

Wherever required, test certificates should be sent along with the despatch documents.

8. **ACCEPTANCE OF STORES:**

(a) The stores shall be tendered by the Contractor for inspection at such places as may be specified by the purchaser at the Contractor's own risk, expense and cost.

(b) It is expressly agreed that the acceptance of the stores Contracted for, is subject to final approval by the purchaser, whose decision shall be final.

(c) If, in the opinion of the purchaser, all or any of the stores do not meet the performance or quality requirements specified in the Purchase Order, they may be either rejected or accepted at a price to be fixed by the purchaser and his decision as to rejection and the prices to be fixed shall be final and binding on the Contractor.

(d) If the whole or any part of the stores supplied are rejected in accordance with Clause No. 8 (c) above, the purchaser shall be at liberty, with or without notice to the Contractor, to purchase in the open market at the expense of the Contractor stores meeting the necessary performance and quality Contracted for in place of those rejected, provided that either the purchase, or the agreement to purchase, from another supplier is made within six months from the date of rejection of the stores as aforesaid.

9. **REJECTED STORES:**

Rejected stores will remain at destination at the Contractor's risk and responsibility. If instructions for their disposal are not received from the Contractor within a period of 14 days from the date of receipt of the advice of rejection, the purchaser or his representative has, at his discretion, the right to scrap or sell or consign the rejected stores to Contractor's address at the Contractor's entire risk and expense, freight being payable by the Contractor at actuals.

10. **DELIVERY:**

(a) The time for and the date of delivery of the stores stipulated in the Purchase Order shall be deemed to be the essence of the Contract and delivery must be completed on or before the specified dates.

(b) Should the Contractor fail to deliver the stores or any consignment thereof within the period prescribed for such delivery, the purchaser shall be entitled at his option either.

(i) to recover from the Contractor as agreed liquidated damages and not by way of penalty, a sum of 0.5% per week of the price of any stores which the Contractor has failed to deliver as aforesaid or during which the delivery of such store may be in arrears subject to a minimum of 10%, or

(ii) to purchase from elsewhere, without notice to the Contractor on the account and at the risk of the Contractor, the stores not delivered or others of a similar description (where others exactly complying with the particulars, are not, in the opinion of the purchaser, readily procurable, such opinion being final) without cancelling the Contract in respect of the consignment (s) not yet due for delivery, or

(iii) to cancel the Contract or a portion thereof and if so desired to purchase or authorise the purchase of stores not so delivered or others of a similar description (where others exactly if complying with the particulars are not, in the opinion of the purchaser, readily procurable, such opinion final) at the risk and cost of the Contractor.

In the event of action being taken under sub-clause (ii) & (iii) of clause 10 (b) above, the Contractor shall be liable for any loss which the purchaser may sustain on that account, provided that the re-purchase or if there is an agreement to re-purchase then such agreement is made within six months from the date of such failure. But the Contractor shall not be entitled to any gain on such re-purchase made against default. The manner and method of such re-purchase shall be at the discretion of the purchaser, whose decision shall be final. It shall not be necessary for the purchaser to serve a notice of such re-purchase on the defaulting Contractor. This right shall be without prejudice to the right of the purchaser to recover damages for breach of Contract by the Contractor.

11. **EXTENSION OF TIME:**

As soon as it is apparent that the Contract dates cannot be adhered to, an application shall be sent by the Contractor to the purchaser. If failure, on the part of the Contractor, to deliver the stores in proper time shall have arisen from any cause which the purchaser may admit as reasonable ground for an extension of the time (and his decision shall be final) he may allow such additional time as he considers it to be justified by circumstances, of the case without prejudice to the purchaser's right to recover liquidated damages under clause 10 thereof.

12. **ERECTION OF PLANT & MACHINERY:**

Wherever erection of a plant or machinery is the responsibility of the Contractor as per the terms of the Contract and in case the Contractor fails to carry out the erection as and when called upon to do so within the period specified by the purchaser, the purchaser shall have the right to get the erection done through any source of his choice. In such an event, the Contractor shall be liable to bear any additional expenditure that the purchaser is liable to incur towards erection. The Contractor shall, however, not be entitled to any gain due to such an action by the purchaser.

13. **PAYMENT:**

Contractor's bill will be passed for payment only after the stores have been received, inspected and accepted by the Purchaser.

14. **MODE OF PAYMENT:**

Normally payment will be made for the accepted stores within 30 days from the date of receipt of the materials.

15. **RECOVERY OF SUM DUE:**

Whenever any claim for the payment of, whether liquidated or not, money arising out of or under this Contract against the Contractor, the purchaser shall be entitled to recover such sum by appropriating in part or whole, the security deposited by the Contractor, if a security is taken against the Contract. In the event of the security being insufficient or if no security has been taken from the Contractor, then the balance or the total sum recoverable as the case may be, shall be deducted from any sum then due or which at any time thereafter may become due to the Contractor under this or any other Contract with the purchaser. Should this sum be not sufficient to cover the full amount recoverable, the Contractor shall pay to the purchaser on demand the remaining balance due. Similarly, if the purchaser has or makes any claim, whether liquidated or not, against the Contractor under any other Contract with the purchaser, the payment of all moneys payable under the Contract to the Contractor including the security deposit shall be withheld till such claims of the purchaser are finally adjudicated upon and paid by the Contractor.

16. **INDEMNITY:**

The Contractor shall warrant and be deemed to have warranted that all stores supplied against this Contract are free and clean of infringement of any Patent, Copyright or Trademark, and shall at all times indemnify the purchaser against all claims which may be made in respect of the stores for infringement of any right protected by Patent Registration of design or Trade mark and shall take all risk of accidents or damage which may cause a failure of the supply from whatever cause arising and the entire responsibility for sufficiency of all means used by him for the fulfillment of the contract.

17. **ARBITRATION:**

In the event of any question, dispute or difference arising under these conditions or any conditions contained in the Purchase Order or in connection with this Contract (except as to any matter the decision of which is specially provided for by these conditions), the same shall be referred to the sole arbitration of the Head of the Purchase office or some other person appointed by him. It will be no objection that the arbitrator is a Government servant, that he had to deal with matter to which the Contract relates or that in the course of his duties as Government servant he has expressed views on all or any other matters in dispute or difference. The award of the arbitrator shall be final and binding on the parties of this Contract.

If the arbitrator be the Head of the Centre/Unit –

(i) In the event of his being transferred or vacating his office by resignation or otherwise, it shall be lawful for his successor-in-office either to proceed with reference himself, or to appoint another person as arbitrator, or

(ii) In the event of his being unwilling or unable to act for any reason, it shall be lawful for the Head of the Centre/Unit to appoint another person as arbitrator.

If the arbitrator be a person appointed by the Head of the Purchase Office – In the event of his dying, neglecting or refusing to act or resigning or being unable to act, for any reason, it shall be lawful for the Head of the Centre/Unit either to proceed with the reference himself or appoint another person as arbitrator in place of the outgoing arbitrator. Subject as aforesaid the Arbitration & Conciliation Act 1996 and the rules there under and any statutory modifications thereof for the time being in force shall be deemed to apply to the arbitration proceedings under this Clause. The Arbitrator shall have the power to extend with the consent of the purchaser and the Contractor the time for making and publishing the award. The venue of arbitration shall be the place as purchaser in his absolute discretion may determine. Work under the Contract shall, if reasonably possible, continue during arbitration proceedings.

In the event of any dispute or difference relating to the interpretation and application for the provisions of the Contracts, such dispute or difference shall be referred by either party to Arbitration of one of the Arbitrations in the Department of Public Enterprises. The Arbitration Act 1996 shall not be applicable to arbitration under this clause. The award of the Arbitrator shall be binding upon the parties to the dispute provided however any party aggrieved by such award may make a further reference for setting aside or revision of the award to the Law Secretary, Department of Legal Affairs. Ministry of Law & Justice, Govt. of India. The parties to the dispute will share equally, the cost of arbitration as intimated by Arbitrator.

18. **COUNTER TERMS AND CONDITION OF SUPPLIERS:**

Where counter terms and conditions printed or cyclostyled conditions have been offered by the supplier, the same shall not be deemed to have been accepted by the Purchaser, unless specific written acceptance thereof is obtained.

19. **SECURITY FOR PURCHASE OF MATERIALS:**

Successful tenderer will have to furnish in the form of a bank guarantee or any other form as called for by the purchaser towards adequate security for the materials and properties provided by the Purchaser for the due execution of the Contract.

*****

Form No. DOS:PM:22

GOVERNMENT OF INDIA
DEPARTMENT OF SPACE
VIKRAM SARABHAI SPACE CENTRE
PURCHASE UNIT - III,
PCM/PRSO PURCHASE, RFF AREA, ISRO P.O
THIRUVANANTHAPURAM - 695 022
Tel. 0471 2563775, 3617, 3609 **Fax : 0471 2562105**
Email : spso_prso@vssc.gov.in

I. INSTRUCTIONS TO TENDERERS

1. The Tenderers should submit quotations in duplicate in a sealed envelope, superscribing the Tender No. and due date of opening and complete in all respects with technical specifications, including pamphlets and catalogues.
2. A Proforma Invoice may also be given which should contain the following information:
   a. The FOB/FCA value, the C & F value for import by Sea freight / Air freight up to and for air parcel post up to **Thiruvananthapuram, Kerala, India** should be separately indicated.
   b. Agency Commission: The amount of commission included in the price and payable to the Indian Agent of the Contractor shall be paid directly to the Indian Agent by the Purchaser in equivalent Indian Rupees on the basis of an Invoice from him applying T.T. buying rate of exchange ruling on the date of placement of the Purchase Order and which shall not be subject to any further exchange variations. This payment will be released to the Indian Agent immediately after Customs clearance of the goods in India.
   c. The Contractor shall invoice only for the net amount payable to him, after deducting the amount of Agency Commission included in the invoice which will be paid to the Indian Agent directly by the Purchaser. However, the Contractor's invoice should separately reflect the amount of commission payable to his Indian Agent.
   d. The earliest delivery period and country of origin of the Stores.
   e. Banker's name, address, telephone/fax Nos. & e-Mail ID of the Contractor.
   f. The approximate net and gross weight and dimensions of packages /cases.
   g. Recommended spares for satisfactory operation for a minimum period of one year.
   h. Details of any technical service, if required for erection, assembly, commissioning and demonstration.
3. The FOB/FCA and C & F prices quoted should be inclusive of all taxes, levies, duties arising in the tenderer's country.
4. **The offer should be valid for a minimum period of 90 days from the due date of opening of the tender.**
5. Samples, if called for, should be sent free of all charges.
6. Late and delayed tenders will not be considered.
7. Offers made by Indian Agents on behalf of their Principals, should be supported by the proforma invoice of their Principals.
8. The details of Import Licence will be furnished in the Purchase Order.
9. The authority of person signing the tender, if called for, shall be produced.
10. Instructions / Operation Manual containing all assembly details including wiring diagrams should be sent wherever necessary in duplicate. All documents /correspondence should be in English language only.
11. The Purchaser reserves the right to accept or reject the lowest or any offer in whole or part without assigning any reason.
12. It is expressly agreed that the acceptance of the Stores Contracted for is subject to final approval in writing by the Purchaser.
13.
    a. Part shipment is not allowed unless specifically agreed to by us.
    b. As far as possible stores should be despatched by Indian Flag Vessels /Air India through any Agency nominated by us.
14. Inspection / Test Certificate should be provided for the goods after testing it thoroughly at the Contractor's works. If any Inspection by Lloyds or any other testing agency is considered necessary, it shall be arranged by Contractors.
15. Where erection or assembly or commissioning is a part of the Contract, it should be done immediately on notification. The Contractor shall be responsible for any loss/damage sustained due to delay in fulfilling this responsibility.
16. For items having shelf life, those with maximum shelf life should be supplied if order is placed.

II. TERMS AND CONDITIONS

1. DEFINITIONS:
   a. The term 'Purchaser' shall mean the President of India or his successors or assignees.
   b. The term 'Contractor' shall mean, the person, firm or company with whom or with which the order for the supply of stores is placed and shall be deemed to include the Contractor's Successors, representatives, heirs,executors and administrators unless excluded by the Contract.
   c. The term 'Purchase Order' shall mean the communication signed on behalf of the Purchaser by an officer duly authorised intimating the acceptance on behalf of the Purchaser on the terms and conditions mentioned or referred to in the said communication accepting the Tender or offer of the Contractor for supply of stores of plant, machinery or equipment of part thereof.

d. The term 'Stores' shall mean what the Contractor agrees to supply under the Contract as specified in the Purchase Order.

2. PRICES:Tenders offering firm prices will be preferred. Where a price variation clause is insisted upon by a tenderer, quotations with a reasonable ceiling should be submitted. Such offers should invariably be supported by the base price taken into account at the time of tendering and also the formula for any such variations.

3. **TERMS OF PAYMENT:**

3.1 Being a Department of the Government of India, the normal terms of payment are by Sight Draft. However other terms of payment like establishment of Letter of Credit may be considered by the Purchaser on such terms and conditions as may be agreed upon.

3.2 The Sight Draft / Letter of Credit will be operative on presentation of the under mentioned documents:

a) Original Bill of Lading / Airway Bill..

b) Commercially certified invoices describing the stores delivered, quantity, unit rate and their total value, in triplicate. The invoice should indicate the discounts, if any, and Agency Commission separately.

c) Packing List showing individual dimensions and weight of packages.

d) Country of Origin Certificate in duplicate.

e) Test Certificate.

f) Declaration by the Seller that the contents in each case are not less than those entered in the invoices and the quality of the Stores are guaranteed as per the specifications asked for by the Purchaser.

g) Warrantee and guarantee Certificate/s vide Clause 20 herein below.

4. **IMPORT LICENCE:** Reference to Import License No. & date and Contract number & date shall be prominently indicated in all the documents vide Para 3.2.

5. **DEMURRAGE:** Supplier shall bear demurrage charges, if any, incurred by the purchaser due to delayed presentation of shipping documents as prescribed in Para 3.2 to the bankers within a reasonable time (say within 10-12 days) from the date of bill of lading for sea consignments and within 3-4 days from the date of Air Way Bill for air consignment.

6. **ADDRESS OF INDIAN AGENTS:**.....

7. **GUARANTEED TIME DELIVERY:** The time for and the date of delivery stipulated in the Purchase Order shall be deemed to be the essence of the Contract. Delivery must be completed with in the date specified therein.

8. **INSPECTION AND ACCEPTANCE TEST:**

8.1 The Purchaser's representatives shall also be entitled at all reasonable times during manufacture to inspect, examine and test on the Contractor's premises the material and workmanship of all stores to be supplied under this Contract and if part of the said stores is being manufactured on other premises, the Contractor shall obtain for the purchaser's representative permission to inspect, examine and test as if the equipment were being manufactured on the Contractor's premises. Such inspection, examination and testing shall not release the Contractor from the obligations under this Contract.

8.2 For tests on the premises of the Contractor or of any of his sub-Contractors, the Contractor shall provide free of cost assistance, labour, material, electricity, fuel and instruments as may be required or as may be reasonably needed by the purchaser's representative to carry out the tests efficiently.

8.3 When the stores have passed the specified test, the purchaser's representative shall furnish a certificate to the effect in writing to the Contractor. The Contractor shall provide copies of the test/s certificates to the purchaser as may be required.

9. MODE OF DESPATCH: Generally, stores should be despatched through Indian Flagged Vessel / Air India or through any other Agency nominated by the purchaser. A copy of the invoice and packing list should invariably be kept inside each of the packages.

10. **PORT OF ENTRY:** Thiruvananthapuram for Air Cargos and Kochi Sea Port for Ocean vessel cargos.

11. **CONSIGNEE:**

PURCHASE & STORES OFFICER
VIKRAM SARABHAI SPACE CENTRE
PURCHASE UNIT - III,
PCM/PRSO PURCHASE, RFF AREA, ISRO P.O
THIRUVANANTHAPURAM - 695 022

12. SHIPPING MARKS. The mark on the shipping documents such as invoice, bill of lading and on the packages should be as follows:

PURCHASE ORDER NO.:..... DATE: .....

Government of India, Department of Space
Vikram Sarabhai Space Centre
Purchase Unit - III,
PCM/PRSO Purchase, RFF Area, ISRO P.O
Thiruvananthapuram - 695 022

Destination: Thiruvananthapuram

PORT OF ENTRY: Air freight to **THIRUVANANTHAPURAM International Airport.**

Sea freight to **KOCHI/ CHENNAI/**

13. INSURANCE OF THE STORES: The necessity or otherwise of insurance will be as indicated in the Purchase Order.

14. **CONTRACTOR'S DEFAULT LIABILITY:**

14.1. The purchaser may upon written notice of default to the Contractor terminate the Contract in whole or in part in circumstances detailed here under:

a) If in the judgement of the Purchaser the Contractor fails to make delivery of Stores within the time specified in the Contract/agreement or within the period for which extension has been granted by the Purchaser to the Contractor.

b) If in the judgment of the Purchaser the Contractor fails to comply with any of the other provisions of this Contract.

15. In the event the Purchaser terminates the Contract in whole or in part as provided in Clause 14 the Purchaser reserves the right to Purchase, upon such terms and in such a manner as he may deem appropriate, stores similar to that terminated and the Contractor shall be liable to the Purchaser for any additional costs for such similar stores and/or for liquidated damages for delay as defined in Clause 19 until such reasonable time as may be required for the final supply of stores.

15.1 If this Contract is terminated as provided in Clause 14 the Purchaser in addition to any other rights provided in this Article, may require the Contractor to transfer title and deliver to the Purchaser under any of the following clauses in the manner and as directed by the Purchaser:

a) Any completed stores.

b) Such partially completed stores, drawing, information and Contract rights (hereinafter called manufacturing material) as the Contractor has specifically produced or acquired for the performance of the Contract as terminated. The Purchaser shall pay to the Contractor the Contract price for completed stores delivered to and accepted, by the purchaser and for manufacturing material delivered and accepted.

15.2 In the event the Purchaser does not terminate the Contract as provided in Clause 14, the Contractor shall continue the performance of the Contract in which case he shall be liable to the purchaser for liquidated damages for delay as set out in Clause 19 until the stores are accepted.

16. **REPLACEMENT:** If the stores or any portion thereof is damaged or lost during transit, the Purchaser shall give notice to the Contractor setting forth particulars of such stores damaged or lost during transit. The replacement of such stores shall be effected by the Contractor within a reasonable time to avoid unnecessary delay in the intended usage of the Stores. In case the purchaser agrees, the price towards replacement items shall be paid by the purchaser on the basis of original price quoted in the tender or as reasonably worked out from the tender.

17. **REJECTION:** In the event that any of the stores supplied by the Contractor is found defective in material or workmanship or otherwise not in conformity with the requirements of the Contract specifications, the purchaser shall either reject the stores or request the Contractor, in writing, to rectify the same. The Contractor, on receipt of such notification, shall either rectify or replace the defective stores free of cost to the purchaser. If the Contractor fails to do so, the purchaser may at his option either –

a. replace or rectify such defective stores and recover the extra cost so involved from the Contractor, or

b. terminate the Contract for default as provided under clause 14 above, or

c. acquire the defective stores at a reduced price considered equitable under the circumstances. The provision of this article shall not prejudice the Purchaser's rights under clause 19.

18. **EXTENSION OF TIME:** If the completion of supply of stores is delayed due to reason of ***force majeure*** such as acts of god, acts of public enemy, acts of Government, fires, floods, epidemics, quarantine restriction, strikes, freight embargoes, etc., the Contractor shall give notice within 15 days to the purchaser in writing of his claim for an extension of time. The purchaser on receipt of such notice after verification, if necessary, may agree to extend the Contract delivery date as may be reasonable but without prejudice to other terms and conditions of the Contract.

19. **DELAY IN COMPLETION / LIQUIDATED DAMAGES:** If the Contractor fails to deliver the stores within the time specified in the Contract or any extension thereof, the purchaser shall recover from the Contractor as liquidated damages a sum of one-half of one percent (0.5percent) of the Contract price of the undelivered stores for each calendar week of delay. The total liquidated damages shall not exceed ten percent (10percent) of the Contract price of the unit or units so delayed. Stores will be deemed to have been delivered only when all their component parts are also delivered. If certain components are not delivered in time, the stores will be considered as delayed until such time as the missing parts are delivered.

20. **GUARANTEE & REPLACEMENT:**

a. The Contractor shall guarantee that the stores supplied shall comply fully with the specifications laid down for material, workmanship and performance.

b. For a period of twelve months after the acceptance of the stores, if any defects are discovered therein or any defects therein are found to have developed under proper use arising from faulty materials, design or workmanship, the Contractor shall remedy such defects at his own cost provided he is called upon to do so within a period of 14 months from the date of acceptance thereof by the Purchaser who shall state in writing in what respect the stores or any parts thereof are faulty.

c. If in the opinion of the purchaser it becomes necessary to replace or renew any defective stores, such replacements or renewals shall be made by the Contractor free of all costs to the purchaser provided the notice informing the Contractor of the defect is given by the purchaser in this regard within the said period of 14 months from the date of acceptance thereof.

d. Should the Contractor fail to rectify the defects, the purchaser shall have the right to reject or repair or replace at the cost of the Contractor the whole or any portion of the defective stores.

e. The decision of the Purchaser, notwithstanding any prior approval or acceptance or inspection thereof on behalf of the purchaser, as to whether or not the stores supplied by the Contractor are defective or any defects has enveloped within the said period of 12 months or as to whether the nature of the defects requires renewal or replacement shall be final, conclusive and binding on the Contractor.

f. To fulfill guarantee conditions outlined in Clause 20 (a) to (e) above, the Contractor shall, at the option of the purchaser, furnish a Bank Guarantee (as prescribed by the purchaser - Bank Guarantee format enclosed) from a

Bank approved by the purchaser for an amount equivalent to 10% of the value of the Contract along with first shipment documents. On the performance and completion of the Contract in all respects, the Bank Guarantee will be returned to the Contractor without any interest.

g. All the replacement stores shall also be guaranteed for a period of 12 months from the date of arrival of stores at purchaser's site.

h. Even while the 12 months guarantee applies to all stores, in case where a greater period is called for by our specifications, then such a specification shall apply, and in such cases, the period of 14 months referred to in Clause 20 (b)and (c) shall be asked for guarantee period plus two months.

21. **REQUIREMENT OF ADDITIONAL NUMBERS OF THE STORES/SPAREPARTS ORDERED:** The Contractor shall also undertake the supply of additional number of items covered by the order as considered necessary by the purchaser at a later date, the actual price to be paid shall be mutually agreed to after negotiations.

22. **PACKING:**

a. The Contractor wherever applicable shall pack and crate all stores for sea /air shipment as applicable in a manner suitable for export to a tropical humid climate, in accordance with internationally accepted export practices and in such a manner so as to protect it from damage and deterioration in transit by road, rail or sea for space qualified stores. The Contractors shall be held responsible for all damages due to improper packing.

b. The Contractor shall ensure that each box / unit of shipment is legible and properly marked for correct identification. The failure to comply with this requirement shall make the Contractor liable for additional expenses involved.

c. The Contractor shall notify the purchaser of the date of shipment from the port of embarkation as well as the expected date of arrival of such shipment at the designated port of arrival.

d. The Contractor shall give complete shipment information concerning the weight, size, content of each packages, etc.

e. Transhipment of equipment shall not be permitted except with the written permission of the purchaser.

f. Apart from the despatch documents negotiated through Bank, the following documents shall also be airmailed to the purchaser within 7 days from the date of shipment by sea and within 3 days in case of air-consignments:

i. Commercial Bill of Lading / Air Way Bill /
Post parcel Receipt. (Two non-negotiable copies)

ii. Invoice (3 copies)

iii. Packing List (3 copies)

iv. Test Certificate (3 copies)

v. Certificate of Origin.

The Contractor shall also ensure that one copy of the packing list is enclosed in each case.

23. **ARBITRATION:** If at any time any question, dispute or difference whatsoever shall arise between the purchaser and the Contractor upon or in connection with this Contract, either party may forthwith give to the other notice in writing of the existence of such question, dispute or difference and the same shall be referred to the adjudication of two arbitrators, one to be nominated by purchaser, other by a Contractor and in the event of any difference of opinion, the arbitrators will refer the matter to the umpire. The arbitration shall be conducted in accordance with the rules and procedure for arbitration of the International Chamber of Commerce at Paris. The expenses of the arbitrators and umpire shall be paid as may be determined by them. However, the venue of such arbitration should be in India.

24. **LANGUAGE AND MEASURES:** All documents pertaining to the Contract including specification, schedule, notice, correspondence, operating and maintenance instructions, drawings or any other writings shall be written in English language. The metric system of measurement shall be used exclusively in the Contract

25. **INDEMNITY:** The Contractor shall warrant and be deemed to have warranted that all Stores supplied against this Contract are free and clean of infringement of any patent, copyright or trade mark and shall at all times indemnify the purchaser against all claims which may be made in respect of stores for infringement of any right protected by Patent, Registration of design or Trade Mark, and shall take all risk of accident or damage which may cause a failure of the supply from whatever cause arising and the entire responsibility for the sufficiency of all the means used by him for the fulfilment of the Contract.

26. **COUNTER TERMS AND CONDITIONS OF SUPPLIERS:** Where counter terms and conditions/printed or cyclostyled conditions have been offered by the supplier, the same shall not be deemed to have been accepted by the purchaser unless specific written acceptance thereof is obtained.

27. **SECURITY INTEREST:** On each item to be delivered under this Contract, including an item of work in progress in respect of which payments have been made in accordance withthe terms of the Contract, purchaser shall have a security interest in such items which shall be deemed to be released only at the time when the applicable deliverable item is finally accepted and delivered to the purchaser in accordance with the terms of the Contract. Such security interest of the purchaser shall constitute a prior charge as against any other charge or interest created in respect of such items by any entity.

28. **BANK CHARGES:** While the purchaser shall bear the bank charge payable to his Bankers **[State Bank of India]** the Contractor shall bear the Bank charges payable to his Bankers including the cheques towards advising amendment commissions.

29. **TRAINING:** The Contractor shall, if required by the purchaser, provide facilities for the practical training of Purchaser's engineering / technical personnel from India and for their active association on the manufacturing processes throughout the manufacturing period of the Contract / stores, number of such personnel to be mutually agreed upon.

30. **APPLICABLE LAW:** The Contract shall be interpreted, construed and governed by the laws of India.

*****

GOVERNMENT OF INDIA
DEPARTMENT OF SPACE
VIKRAM SARABHAI SPACE CENTRE
CMSE PURCHASE, VATTIYOORKAVU PO
THIRUVANANTHAPURAM 695013
KERALA, INDIA

Ph No: 0471-2569290/2569289
Fax 0471-2569236
Email: pso_cmse_pur@vssc.gov.in

Date : 02/01/2020

INVITATION TO TENDER

Our Ref No : 4554 2019-005294-01

M/s 000000

Tender Due: [illegible] **Hrs ISTon** [illegible]

Dear Sirs,

Please submit your sealed quotation , in the Tender Form enclosed here along with the descriptive catalogues / pamphlets /literature ,superscribed with Our Ref.No. and Due Date for the supply of the following items as per the terms & conditions mentioned in Annexure(Form No: DOS:PM:20)

S.No.	Description of Items with Specifications	Unit	Quantity
1	AUTOMATED ULTRASONIC C-SCAN SYSTEM (Detailed Specifications as per Annexure-1)	No.	1

DELIVERY AT: CMSE, VATTIYOORKAVU

MODE OF DESPATCH ON SITE

DUTY EXEMPTIONS AS PER THE CL.NO.2 OF INSTRUCTIONS TO THE BIDDERS

SPECIAL INSTRUCTIONS PT- TWO PART - Special Conditions attached.

SPECIFIC TERMS DOS:PM:20

INSTRUCTIONS TO TENDERERS:

1. Quotation should be submitted in sealed envelop. Email/fax quotation will not be considered.
2. Specification as per drawings/ Annexure attached.

For and on behalf of the President of India
The Purchaser

Specifications for Automated Ultrasonic C-Scan System

1) Introduction:

The party shall supply an ***"Automated Ultrasonic C-Scan system"*** for Non-Destructive Testing (NDT) of axis-symmetric Composites Structures.

The system shall be capable of carrying out ultrasonic through transmission testing in air-coupled mode and ultrasonic pulse-echo testing in contact mode.

2) Scope of Supply:

Scope of supply consists of **"Design, Manufacture, Performance Demonstration, Delivery, Installation, Commissioning and Training of an Automated Ultrasonic C-Scan system"** on "turn-key basis" at Composites Entity (CMSE), Vattiyoorkavu, Trivandrum, Kerala, India. The system is intended for NDT of axis-symmetric composite products.

The system shall consist of

2.1. Necessary hardware & software for

a) Air-Coupled C-Scan Ultrasonic testing in through transmission mode

b) Contact type Ultrasonic testing in pulse-echo mode.

2.2. Complete system including hardware, software & system integration for "Gantry type probe positioning system" to carry out the functions mentioned in Section 2.1 on test articles mentioned in Section.3.

3) Articles to be tested

The product configuration and geometry of the articles to be inspected as in Table-1.

Table-1			
Sl. No.	**Geometry & Material and Type of test**	**Size**	**Figure**
1.	**Geometry**: Frustum of cone **Material**: Silica Phenolic, Carbon Phenolic, Carbon-Carbon **Test type:** Air-coupled Through Transmission	• Minor diameter varies from: 350 mm to 2000 mm; • Major diameter varies from: 500 mm to 3500 mm; • Height varies from: 500 mm to 2000 mm; • Thickness along the profile varies from: 10 mm to 100 mm for various products	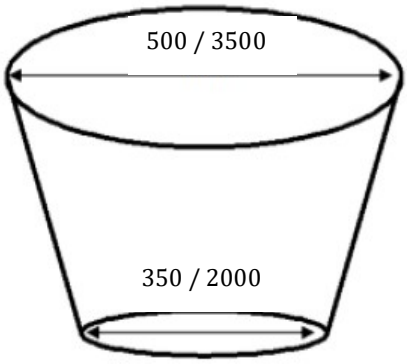 *Fig 1a: Frustum of cone* Max. Weight: 1000 kg
2.	**Geometry**: Cylinder block with varying thickness **Material**: Silica Phenolic, Carbon Phenolic, Carbon-Carbon **Test type:** Contact type Phased Array UT in Pulse-Echo mode with industrial ethyl alcohol as couplant from outside surface	• Height varies from: 500 mm to 2000 mm; • Diameter varies from 350 to 1500 mm • Thickness along the profile varies from 10 mm to 200 mm for various products	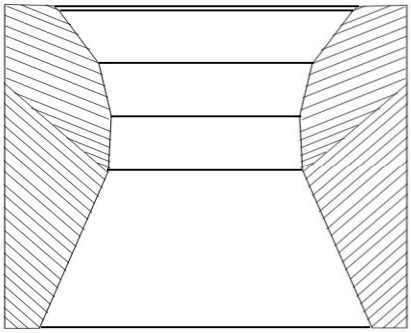 *Fig 1b: Cylinder block with varying thickness* Max. Weight: 500 kg
3	**Geometry**: Frustum of cone **Material:** Steel with composite liners bonded on inner surface **Test type**: Contact type Pulse-Echo with grease & oil mix as couplant from component outside surface	• Maximum metallic hardware thickness is 25 mm.	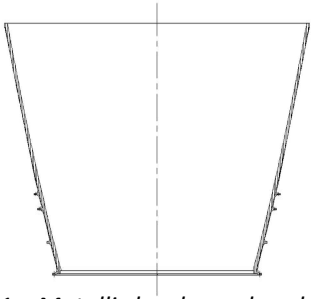 *Fig 1c: Metallic hardware bonded to composite liner* Max. Weight: 2000 kg

4) Ultrasonic tests to be carried out

4.1 Through Transmission (TT) testing uses two separate probes which are positioned on either side of the component wall. One acts as a transmitter, while other as a receiver. These probes have to be aligned to each other in such away that the transmitter probe shall be normal to the test surface and both the transmitter and receiver probes shall be collinear.

The probes shall maintain a predefined stand-off distance from the component surface during the testing; based on air-coupled probe characteristics. Suitable system shall be configured to maintain the specified stand-off distance on either side of the test surface.

The system shall enable identification of defects like delamination in laminated construction, debond between metal and composite liner, debond between face skin and core in sandwich, porosity, inclusion etc.

4.2 Pulse-Echo (PE) uses a single & phased array probe which acts as both transmitter and receiver. The pulse-echo testing with grease & oil mix as couplant will be carried out from metallic hardware side to check the bond interface between metallic hardware and composite liner in contact mode.

Pulse-echo testing shall also be carried out using industrial ethyl alcohol as couplant from outer side of the component mentioned in table-1.

The system shall enable identification of defects like delamination in laminated construction, debond between metal and composite liner, porosity, inclusion etc.

5) System Configuration

The offered system shall incorporate following features:

a) The entire system shall comprise of the necessary hardware and software systems.

b) The hardware systems shall include gantry type probe positioning system, control PC, ultrasonic pulser-receiver, ultrasonic probes & cables, data acquisition system, etc.

   Software systems shall include modules for scan path generation, interpolated motion control, data acquisition (position data & ultrasonic data) and ultrasonic data processing and presentation in A, B & C Scan formats. The system shall have the necessary Graphical User interfaces to enable the user to visualize, set

parameters of the probe positioner & ultrasonic unit, execute the scan, visualize the post processed output.

c) Generation of scan path for ultrasonic testing using a Teach-in and playback software.

d) Generation of scan path for ultrasonic testing from the CAD models of the test article.

e) The system shall carry out ultrasonic inspection of the test articles in automated mode following the generated scan paths, acquire the ultrasonic test data, integrate the data with the positioner location data, analyse & post process the acquired information in A, B & C Scan formats, storage of the processed data, archival and retrieval. Wherever defects are located, the system shall be configured so as to re-position the probe at the defective location(s) based on the scan data.

f) The system shall have the capability that, if the scan is interrupted / stopped either intentionally or due to power failure, the system should be able to continue the scan from the point where it stopped, without the loss of data which were acquired till intentional stoppage / power failure.

g) The proposed system shall be capable of detecting typical defects like delamination in laminated construction, debond between metal and composite liner, debond between face skin and core in sandwich, porosity, inclusion etc.

h) The system shall have the capability of inspecting axis-symmetric composite parts (laminate & sandwich) with thickness varying from 1 to 200 mm in air coupled through transmission mode.

i) The system shall have the capability of inspecting the bond between metallic hardware and composite liner in pulse-echo contact mode. The thickness of metallic hardware will be up to a maximum of 25 mm.

j) The system shall also have the capability of inspecting the composite liner in pulse-echo contact mode using industrial ethyl alcohol as couplant. The thickness of the liner varies from 10 mm to 200 mm.

k) Density of composite products ranges from 0.3 gm/cc to 2.5 gm/cc.

5 a) Automated Probe Positioning System specifications

1.	**General** The automated probe positioning system shall be of gantry type having a rotary table with multi-axes, simultaneous, closed loop servo control interpolation of all axes to cater ultrasonic C-scan testing of test articles as per Section 3. • The schematic of the system is given in figure 1. 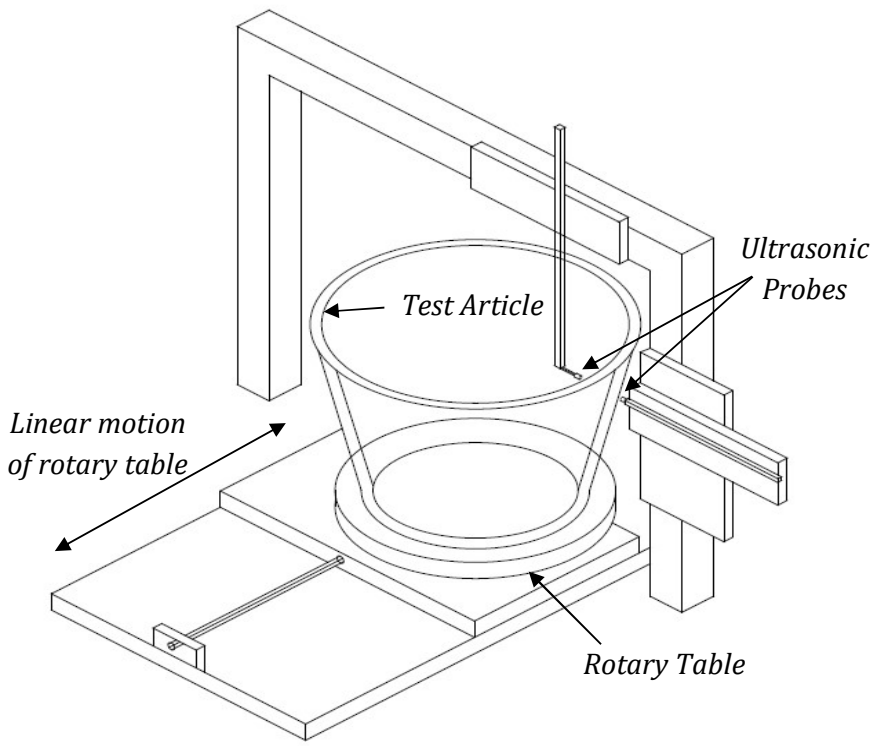 *Figure 1: Schematics of the Automated Probe Positioning System*	

2.	Function	Ultrasonic testing using
		• Air-Coupled Through Transmission method
		• Pulse Echo with Single & Phased Array probe and contact method using couplants.
		  • Grease & oil mix
		  • Industrial ethyl alcohol

3.	Linear axis	
	a) Scanning Speed	5 to 500 mm/s or better
	b) Positional accuracy of linear axes	Within ± 0.1 mm per 1000 mm or better
	c) Repeatability of linear axes	0.05 mm or better
	d) Resolution of linear axes	0.02 mm or better

4.	Turn Table	
	a) Speed	1 to 5 RPM (continuous rotation)
	b) Positional accuracy of rotary axis	Within ± 0.05 deg. or better
	c) Repeatability of rotary axis	0.03 deg.
	d) Resolution of rotary axis	0.02 deg.
	• Rotary table shall have a linear axis movement (as shown in figure 1) for stroke length of 3000 mm from the central plane of the gantry for setting the test product on the rotary table. • Rotary table shall have concentric circles on it for setting the test component easily on it. • T-slots shall be provided on the rotary surface. • It shall also have clamping mechanism for holding the test component firmly. Self-centering jaws or similar mechanisms may be adopted for this.	
5.	Drives	Servo motors (make: Siemens) with multi-turn encoders.
6.	Motion Controller	• Simultaneous interpolation control of the necessary axes shall be provided. Other axes shall be provided with positioning control. In through transmission testing the ultrasonic probes shall be aligned to each other in such a way that the transmitter probe shall be normal to the test surface and the receiver probe shall be collinear with the transmitter probe. The probes shall maintain a settable stand-off distance from the component surface during the testing. In pulse echo testing, the probe shall be in contact with the surface and shall exert a constant contact force during testing in the scanning process. • Jog mode, MDA (Manual Data Automatic) mode and fully auto mode shall be enabled for the motion control. • Operator console with all the required switches / keys.

7.	Graphical User Interface (GUI) for setting up the work	• Each axis of motion shall be controlled from operator console and also from a hand held pendant. • User interface shall have the modules for scan path generation.
8.	End effectors	• The end effectors of the gantry system shall have suitable probe holders for air-coupled probes and single & phased array contact probes. The probe holders shall be designed in such a way that the transmitter probe shall be normal to the test surface and both the transmitter and receiver probes shall be collinear in through transmission testing. • Distance sensor shall be incorporated in the probe holder in order to ensure the stand-off distance for air-coupled through transmission testing. • The probe holders shall have suitable mechanism to hold the contact probe (single & phased array probe) and ensure positive contact to the metallic surface. • End effector shall have a provision for taking minor variations such as ovality up to 0.05 % of the diameter of test product while testing in contact mode. • Suitable couplant feed systems shall be provided for grease & oil mix couplant. The system shall have a provision to flush out the couplant from the feed lines after testing to make the feed lines clog-free. • A separate couplant feed system shall be provided for industrial ethyl alcohol. The system shall provide a thin film of alcohol between the PAUT probe and component surface during testing.
9.	Lubrication System for gantry	Automatic greasing system shall be provided.

5 b) Pulser-Receiver for Air-Coupled Ultrasonic System

- Pulser-receiver & probes from standard manufacturers (Ultran or QMI or SonoTec or RITEC or C-Scan System supplier's own make) for air-coupled ultrasonic testing shall be provided.
- Inspection Techniques: Automated Data acquisition in through transmission mode (Amplitude, Time of Flight & Energy received data), A-Scan & C-Scan.
- Probe frequency shall be in the range of 35 KHz to 750 KHz.
- 2 pairs of probes (pulser & receiver) for each nominal frequency as given below shall be provided with the system.
    - 50 KHz – 2 Sets
    - 120 KHz – 2 Sets
    - 225 KHz – 2 Sets
    - 400 KHz – 2 Sets

(However, the party shall supply suitable probes in the above frequency range compatible with the pulser-receiver supplied.)

5 c) Pulser-Receiver for Pulse-Echo Ultrasonic phased array System

- Pulser-receiver, single & phased array probes from standard manufacturers (Olympus, M2M or C-Scan System supplier's own make) for pulse-echo ultrasonic testing shall be provided.
- The configuration of PAUT system (32:128) shall have an array of 128 elements or more with an aperture of 32 elements or more.
- Inspection Techniques: Automated Data acquisition in pulse-echo mode (Amplitude, Time of Flight & Energy received data), A, B & C-Scans.
- Probe frequency shall be in the range of 1 MHz to 5 MHz.
- 2 nos. of probe for each nominal frequency shall be provided with the system.
    - 1.5 MHz (32 elements) – 2 Nos.
    - 2.25 MHz (32 elements) – 2 Nos.
    - 5 MHz (32 elements) – 2 Nos.

(However, the party shall supply suitable probes in the above frequency range compatible with the pulser-receiver supplied.)

5 d) Work Station PC with software packages

Workstation PC's shall have custom software with GUI for scan path generation, ultrasound parameter setting, data acquisition and post processing of ultrasound data. GUI in the operator console shall have the provision for controlling each axis of motion, scan path generation, recalling setups from memory, selection of ultrasound test parameters, running scans and display the results in C-scan format, etc.

The specifications of the Work Stations PC with software packages are as follows.

1.	**For online scanning and data acquisition:**	Industrial Grade PC: ○ Processor- Intel i7 (latest generation) ○ RAM – 64 GB ○ SSD Hard disk – 2 TB (minimum) ○ Graphics Card – with 12 GB memory ○ Display monitor (2 Nos.) – High definition 30 inch or better. ○ Network Attached Storage (NAS) Device shall be provided. ▪ Processor Speed: 1.7 GHz or better ▪ Standard Memory: 8 GB ▪ Total Hard Drive Capacity: 16 TB ▪ Interfaces: Gigabit Ethernet & USB 3.0 Ports ○ Display monitor (2 Nos.): Monitor 1 shall display the scan parameters including the UT settings and Monitor 2 shall display the live C-Scan data.
2.	**For post processing & analysis**	Industrial Grade PC: ○ Processor- Intel i7 (latest generation) ○ RAM – 64 GB ○ SSD Hard disk – 2 TB (minimum) ○ Graphics Card – with 12 GB memory ○ Display monitor (1 No.) – High definition 30 inch or better.
3.	**Software Package**	
i)	All software provided shall be compatible with windows operating system.	
ii)	Software package shall include modules for • UT setup mode (Air-coupled and Pulse-echo testing) • Scan setup mode (including scan path generation) • Scan mode • Scan result mode • Post processing mode ➢ All software shall be part of original equipment. ➢ The software upgrade shall be provided at no cost for a period of 5 years after the supply. ➢ Perpetual license shall be provided for all Software's. ➢ All backup software's shall be provided in DVD / USB Hard Drives	

iii)	➢ Software shall have tools to import CAD files to generate scan program / part program. ➢ Generation of scan path for ultrasonic testing using a Teach-in and playback software. ➢ The proven manual part program stored in the systems memory must be available for repetitive scan.
vi)	The software package shall have the capability for: • Both amplitude, Time of flight and energy received data are to be stored during scanning and displayed in real time and in post-processing mode. • UT setup module shall have feature for having different gain setting for different regions in the same product. • Simultaneous display of multiple scan data on screen is required for comparative study. • Changing of colour palettes to simplify the analysis of data. • Ultrasonic set-up details are to be stored in scan file which shall be recalled by the operator at a later date along with motion control and scan parameters. • After completion of scan, the operator shall be able to position the probe anywhere in the scan envelope; selectable in the C-scan image without touching the part for verifying the data. • The C-Scan image shall be projected on the part module to create a 3D C-Scan display. • Image filters and edge detection tools. • Image stitching capability for multiple scans on the test component; should be enabled to get developed view of the C-scan image. • C-scan imaging to be carried out based on a performance check on a reference specimen UT data. • Image analysis mode with defect sizing tools, zooming etc., • Automatic defect sizing algorithm with Histogram analysis tool and automatic computer generated evaluation report.

6) Safety:

1.	The four sides of the scanner area shall be surrounded by photo-electric cell mechanism – so called photo-electrical fence. During part scanning operations, an "intrusion" into the scan area shall activate these modules and thereby the scanner will commence into "emergency stop" mode and the motion will be stopped.
2.	Emergency stop buttons shall be located at 4 corners of the manipulator. An emergency stop to be provided through Scan computer (Operator console) and HMI provided near the manipulator.
3.	Appropriate sensor(s) shall be provided to prevent collision of probe with the inspection parts.

4.	To ensure fail-safe operation of the system, all the axes shall have Electrical limit switches, Mechanical limit switches and Mechanical stoppers.
5.	Fail safe braking of motors.
6.	IP cameras shall be provided at a suitable line of sight for inspection area. The image from the camera shall be presented on additional monitor on the operator desk.
7.	High power and low power cables, control panel and other major items shall be “Rodent Proof” and "Fire Proof".

7) Vendor Selection Criteria:

- Parties shall have proven capability in implementing a similar fully Automated Ultrasonic C-scan system preferably for aerospace applications. Vendor shall provide the list of customers to whom the equipment under offer including the manipulator, motion control, electronics & ultrasonics as an integral unit has been supplied. Vendor shall provide detailed addresses of customers along with contact person’s details.
- The parties who have supplied at least one similar system only will be considered for evaluation.
- Evaluation will be based on the data provided by the party and / or demonstration on defect detectability on reference specimen supplied by VSSC.
- Party from abroad shall have a local representative in India. Vendors shall have full scale servicing facility in India and spares support to be provided for at least ten years. Trained Engineers shall be available in India to attend after sales service.
- Detailed compliance statements with supporting document shall be provided in the bid (mere yes or no will not be considered).
- Based on the above evaluation process, qualified parties only will be invited for the technical presentation and further processing.

  The Selected parties need to present at VSSC, Vattiyoorkavu, Trivandrum, Kerala, India; the preliminary design and layout of the proposed automated ultrasonic C-scan system, make and features of all sub-systems, material of construction, compliance with purchase order specifications in full. This will be presented to a technical evaluation committee. Based on the presentation parties will be short listed for further processing.

8) System Evaluation and Acceptance:

Design, manufacturing, performance demonstration, installation, commissioning and proving of equipment with all the sub systems & accessories shall be carried out by the Vendor on "turn-key basis". After order placement, party shall present detailed design and layout of the automated ultrasonic c-scan system, make and features of all sub-systems, material of construction etc. at VSSC, Vattiyoorkavu. Fabrication and assembly of the system shall start only after getting design approval from VSSC.

- **Pre-Delivery Inspection:** The pre-delivery inspection shall be carried out at manufacturer place in fully operational configuration, demonstrating all features and functional requirements conforming to purchase order specifications. The test results on the reference specimens with built-in defects supplied by VSSC shall be demonstrated to VSSC personnel.
- **Installation, commissioning and training:** Installation and commissioning will be carried out by the party on turn-key basis at VSSC. The components to be tested will be provided by VSSC. Also, all features and functional requirements of the integrated system shall be demonstrated in compliance with purchase order specifications in full.

  Minimum one-week training on all the features of the system shall be imparted to VSSC personnel at CMSE, VSSC, Vattiyoorkavu, Trivandrum, Kerala, India.

9) Delivery Schedule:

The offer shall clearly indicate the project execution milestones after receipt of order.

a) T0: Receipt and acknowledgement of the purchase order.
b) T1: Submission of design for clearance from VSSC.
c) T2: Readiness of components and sub-systems if required.
d) T3: Pre-dispatch inspection at the party's site.
e) T4: Installation, Commissioning & Training at VSSC, Vattiyoorkavu, Trivandrum, Kerala, India.

The party shall mention the duration of T1, T2, T3 & T4 with respect to T0.

10) Electrical Requirements

a) The line voltage is 415V, 50 Hz supply. The system should be protected against voltage fluctuation, spikes and frequent power interruption.
b) All electrical and electronic systems should be in a cabinet with built-in air conditioner.
c) Special earthing requirements if any shall be intimated to VSSC along with foundation details.

11) General Requirements:

a) The party shall provide the estimated system footprint.

b) Offer shall be from Original Equipment Manufacturer (OEM) only.

c) Warranty shall be provided for minimum period of two years from the date of commissioning and acceptance at VSSC, Vattiyoorkavu, Trivandrum, Kerala, India. Post- warranty AMC (Non-Comprehensive) (including two Preventive Maintenance visits per year and any number of break-down calls) shall be quoted for at least three years.

d) Warranty shall be provided by OEM only.

e) Party shall technical expertise to provide AMC for the system for a period of 10 years.

f) Essential spares with price breakup shall be quoted separately for trouble free operation of C-scan system for at least five years after warranty period.

g) The system shall be capable to run continuously for minimum 16 hours per day without failure.

h) Detailed manuals, instructions, data sheets and drawings pertaining to all the aspects of system electronics, controls, transducers and mechanical hardware are to be provided in the form of hard copy and soft copy in English language. Back up copy of the entire system software shall be provided.

i) Drawings of civil works requirements including foundation etc., and all other requirements for installation and commissioning of the equipment at VSSC, Vattiyoorkavu, Trivandrum, Kerala, India, are to be provided at the time of design approval. VSSC shall provide the foundation as per supplier requirement.

j) The system is expected to function in an area where overhead cranes are there. Hence protection / isolation against EMI shall be provided.

k) All necessary tools shall be supplied for operation and maintenance of the system.

12) Commercial Terms:

a) The parties participating in the tender have to submit their offers in two-parts i.e., Technical Bid (including price bid with prices masked) and Price Bid separately in sealed covers.

- During part 1 technical bid, the party has to fill the compliance matrix for all the specification in the format given. Descriptive statements to be provided, as applicable, in the compliance check list. Relevant proof/supplementary document for the compliances are to be furnished and shall be referenced to the technical bid.
- Technical justifications for deviations/variations/modifications proposed are to be clearly spelt out.
- Technical leaflet/ brochure (in English) and write-up (in English) of the proposed model of the system must be furnished by the party along with the quotation.
- Detailed system cost break-up should be given in Part 2 which is the Price Bid.
- Separate price details for AMC, Essential Spares, accessories etc. are also to be provided.

b) All other commercial terms as per VSSC norms.

Enclosure -I

SPECIAL CONDITIONS IN RESPECT OF TWO-PART TENDERS

PROCEDURE TO BE FOLLOWED BY TENDERERS

PART-I: TECHNICAL & COMMERCIAL BID:

(a) TECHNICAL DETAILS:

Our tender enquiry contains technical requirements and specification of items. The detailed technical specifications of your offer should be covered in this part. This part **should not contain Price Details**. This should be sent in a sealed envelope duly super scribing the following details on the top of the envelope.

(b) COMMERCIAL DETAILS:

The commercial terms applicable for this tender such as Delivery terms, Delivery period, Payment Terms, Mode of Despatch, Validity of the Offer, Warranty, Guarantee, Performance Guarantee, Liquidated Damages (for delayed supply), Quantity tolerance etc., shall be covered. The applicable GST rates and duties or requirement of Duty Exemption Certificates also shall be indicated in this part. A copy of the price offer by masking prices shall be enclosed to the technical and commercial part (Part-I) to clearly understand as to whether you have provided the prices as desired by the tender document.

The technical and commercial part should be put in a sealed envelope and super scribed as follows:

PART -II: PRICE BID

The price of the item should be indicated in this part with unit rate. The prices are to be mentioned both in figures as well as in words and each page is to be signed by your authorized signatory. Apart from the cost of the items, packing charges, forwarding charges, freight charges (if applicable), installation and commissioning, training charges etc shall be clearly mentioned. GST rates and Duties applicable shall also be mentioned.

i) The "Technical and Commercial Bid" and the "Price Bid" are to be put in separate sealed covers and **they should be put into a single envelope super scribed with the Tender Number, Due Date and Time.** The cover thus prepared should be sent to the following address so as to reach us on or before the due date and time specified in the tender form.

The Purchase & Stores Officer
CMSE Purchase
Composites Entity
Vattiyoorkavu PO.
Trivandrum - 695 013, Kerala, India

ii) Tenders may be hand delivered or sent by post or through couriers. Levels of responsibility and reliability among couriers with respect to the delivery to VSSC are not entirely satisfactory and tenderers shall therefore choose the couriers with particular case.

iii) The offer should be valid for a minimum period of 120 days from the due date.

iv) **TENDER OPENING** The Technical and commercial Bid will be opened on the specified day and in case any further clarification/discussions are required, such clarifications/discussions shall be called for before opening the Price Bid.

v) Late and Delayed Tenders will not be considered. Therefore, please ensure that your tender is posted well in time to reach us before the due date and time.

vi) Tenders which are not prepared in terms of these instructions are liable to be rejected.

vii) Fax offers shall not be considered.

viii) All the pages of your offer should be signed/initialed by competent authority and affixed with your Company's Seal.

ix) Either the Indian Agent on behalf of the Principal / OEM or Principal / OEM itself can bid but both cannot bid simultaneously for the same item/product in the same tender. If an agent submits bid on behalf of the Principal / OEM, the same agent shall not submit a bid on behalf of another Principal/OEM in the same tender for the same item/product.

x) *Note:-* **YOU MAY CLEARLY SPECIFY ANY EXPORT LICENCE IS REQUIRED AND WHETHER THE ITEM CAN BE SUPPLIED ON HIGH SEA SALES BASIS OR RUPEE PAYMENT IN THE TECHNICAL BID ITSELF WITHOUT MENTIONING THE PRICE**

IMPORTANT : ***Your offer duly complying with the above formalities should reach us on or before the due date and time prescribed in the Tender Enquiry. Late offers, Delayed Offer will summarily be rejected.***

EARNEST MONEY DEPOSIT/BID SECURITY:

1. Earnest Money Deposit (EMD) or Bid Security is obtained to ensure the earnestness of the vendor in the procurement process. Registered Vendors of VSSC/ISRO shall not furnish EMD or Bid Security in the procurement process. Other Vendors participating in the tender process has to furnish EMD through Demand Draft/Banker's Cheque for **Rs. 5.00 Lakhs (Rupees Five Lakhs only) drawn in favour of Accounts Officer, CMSE, VSSC Accounts payable at State Bank of India, Nettayam Branch, Trivandrum-695 013** EMD shall be interest free. EMD shall also be furnished in the form of Fixed Deposit Receipts or Bank Guarantee from any nationalized or the Scheduled Banks executed on non-judicial stamp paper of value Rs.200/-. In case of Bank Guarantee, it shall be valid for a period of 45 days beyond the final tender validity date.

2. Also, Foreign Vendors, Registered Vendors who have already applied for renewal of registration, Central PSUs, PSEs, Autonomous Bodies, Micro and Small Enterprises, KVIC, National Small Industries Corporation etc., are exempted from the payment of EMD.

3. Any tender not accompanied with EMD shall be treated as invalid tender and rejected. Vendors seeking exemption from payment of EMD shall submit necessary proof like registration number etc.

4. EMD of vendor shall be forfeited if the tenderer/contractor withdraws or amends his tender or deviates from the tender in any respect within the period of the validity of the tender. Failure to furnish Security Deposit/Performance Bond by a successful vendor within the specified period shall also result in forfeiture of EMD.

5. EMD shall be refunded to all the unsuccessful vendors within thirty days after placement of the Purchase Order. EMD shall be refunded to the successful tenderer/contractor after payment of the Security Deposit. EMD shall be refunded to all the participants in cases where the tender is cancelled or withdrawn by the Centre/Unit, within thirty days from the date of such cancellation or withdrawal.

INSTRUCTIONS TO THE BIDDERS

1. **GSTIN, Rate & HSN Code:** We are partially exempted from the payment of IGST and eligible for paying IGST @5% vide Ministry of Finance, Dept. of Revenue Notification No.47/2017-Integrated Tax [Rate] dtd.14/11/2017. Necessary IGST Exemption Certificate shall be provided along with Purchase Order. Vendors registered under GST shall mention their GSTIN, wherever necessary as per GST Law. **VSSC GST No.32AAAGV0026J1ZL.**
2. **Customs Duty:** We are partially exempted from payment of Customs Duty vide Notification No.050/2017-Sl.No. 539a dated 30/06/2017 and Notification No. 05/2018 Customs dated 25/01/2018.
   CDEC will be provided for imported item against submission of copy of AWB and Invoice evidencing shipment.
   In case of HSS transactions, Customs duty will be reimbursed on production of documentary proof.
3. **Warranty:** Warranty for the offered item shall be from the date of installation/acceptance of the item at our site for a minimum period of **12 months**, or as specified in the tender document. Please specify warranty period in the offer.
4. **Performance Bank Guarantee (PBG):** PBG @ 10% of order value to be submitted in the form of Bank Guarantee from a Nationalized/Scheduled Bank, valid till successful completion of all contractual obligations, including the warranty period, in case PO/Contract is awarded
5. **Security Deposit:** SD will be applicable if the Purchase Order value is above Rs.5 lakhs. SD @ 10% of order value to be submitted in the form of Bank Guarantee from a Nationalized/Scheduled Bank, or Fixed Deposit Receipt valid till successful completion of PO / Contract, if awarded.
6. **Validity of Offer:** Minimum validity of tender from the date of opening of the tender shall be as follows:
   (a) Two-part tender: 120 days
   (b) Open/Public/Limited Tender (Single part): 90 days
7. **Liquidated Damages Clause:** The delivery period stipulated in the PO is the essence of the order. If you fails to deliver the stores within the time specified in the order, the purchaser shall recover a sum @0.5% of the order value per week /part of a week or 0.5% of the value of stores for which the delivery is delayed for each week of delay/part delay, as case may be, subject to a maximum 10% of order value.
8. **Delivery terms:** Our standard delivery term is FOR, CMSE, VSSC Trivandrum. In case any vendors offer delivery term of Ex-Works, Packing & Forwarding charges, if any, should be indicated separately either as a percentage of the quoted rate or as a lumpsum amount.
9. **Payment terms:** Our standard payment term is 100% within 30 days for indigenous order and Sight Draft/LC for foreign orders. All Bank charges shall be on the account of Vendor.
10. **Purchase/Preference to MSMEs:** Purchase/Price Preference shall be extended to the MSEs under the Public Procurement Policy for MSEs formulated under the Micro, Small & Medium Enterprises Development Act 2006. Necessary authenticated documentary evidences shall be submitted along with your offer. MSEs will be exempted from submission of EMD. Specify your category. All registered MSME vendors are requested to provide their Registration and Ownership details.
11. **Vendors may please note that MSMEs are not exempted from the submission of Security Deposit.**
12. Vendors shall provide the name, address, email ID and contact number of authorised official in order to contact in case of need.
13. PO will be placed on technically and commercially suitable lowest offer basis and VSSC reserves the right to split the order on L1 basis.
14. If any vendor submits forged / false documents along with the tender, offer of such vendors will be summarily rejected and such bidders will be blacklisted for all future tenders.

16. VSSC has the right to cancel the tender without assigning any reason etc.
17. **<u>In case of foreign orders</u>**: (a) Please specify whether any export clearance is required. If required, please provide End User Certificate format along with the offer.
    (b) Please mention percentage of Agency Commission, if any. (Agency Commission shallbe claimed by the Indian Agent through an invoice. Agency commission shall be paid to the Indian agent in Indian Rupees worked out on the basis of Telegraphic transfer buying rate of exchange prevailing on the date of placement of the purchase order/contract and within 30 days from the date of satisfactory acceptance of the item.)
18. **<u>Special conditions against Indian Agents submitting quotations in Foreign Currency</u>**
    (a) Foreign Principal's Proforma Invoice shall indicate the commission payable to the Indian Agent and nature of after sales service to be rendered by the Indian Agent.
    (b) Copy of Agency agreement with the Foreign Principal, precise relationship between them and their mutual interest in the business.
    (c) The enlistment of the Indian Agent with Director-General of Supplies & Disposals under the Compulsory Registration Scheme of Ministry of Finance.
    (d) Compliance of Tax Laws by the Indian agent.
    (e) The bidder shall clearly mention the full ordering address in capital letters.
    (f) The bidder shall clearly mention their banker's address including their SWIFT code compulsorily.
    (g) Any change of address shall be compulsorily supported by documentary proof issued either by Governmental agencies or by Chamber of Commerce.
19. In case any bidder is submitting their offer on High Sea Sales basis[HSS] the Indian Trader shall submit the following documents mandatorily along with their offer : (i) The Import Export Code of the Indian Trader (ii) Bank authorisation code of the Indian Trader (iii) GSTIN of the Indian Trader.
20. In all HSS Purchase Orders/Contract, the Indian Trader shall mandatorily submit the following documents:-
    a) The import Export Code of the Indian Trader.
    b) Bank Authorization Code of the Indian Trader.
    c) GSTIN of the Indian Trader.
    d) High Sea Sale Agreement.
    e) Invoice pertaining to the Indian Trader in INR and the Invoice from the Foreign Vendor in Foreign currency.
21. In respect of HSS Orders/Contracts, in case the Indian Trader fails to submit the aforesaid fie documents meant for custom clearance as at 3 (a) to (e) above, any delay is getting accrued due to the non-submission of one or more of the document (s), late fee and penalties, if any levied by the Customs Authorities shall be recovered from the bills of Indian Trader."

<u>NOTE</u>

- The tender submitted by you shall be compulsorily signed. Unsigned tenders will be summarily excluded from the procurement process.
- If any of the bidders submit any forged or false documents along with the tender, such tenders will be summarily rejected and such bidders will be blacklisted for all future tenders.
- Being a Govt of India Dept., insurance is not required at our cost. Please ensure safe delivery of the ordered item with proper /ROAD/SEA/AIR worthy packing.
    - All delivery formats (PBG, SD IB) shall be provided by the Dept., in case of placement of order.

Form No. DOS:PM:20

GOVERNMENT OF INDIA
DEPARTMENT OF SPACE

VIKRAM SARABHAI SPACE CENTRE

Telephone : 0471-2569290
0471-2569289
Fax : 0471-2569236
Email : pso_cmse@vssc.gov.in

C.M.S.E. PURCHASE
VATTIYOORKAVU
THIRUVANANTHAPURAM - 695 013

INSTRUCTIONS TO TENDERERS AND TERMS & CONDITIONS OF TENDER

I. INSTRUCTIONS TO TENDERERS

1. Tenders should be sent in sealed envelopes superscribing the relevant tender No, and the due date of opening. Only one tender should be sent in each envelope.
2. Late tenders and delayed tenders will not be considered.
3. Sales Tax and/or other duties/levies legally leviable and intended to be claimed should be distinctly shown separately in the tender.
4. As a Government of India Department, this office is exempted from payment of Octroi and similar local levies. Tenderers shall ensure that necessary Exemption Certificates are obtained by them from the Purchase Officer concerned to avoid any payment of such levies.
5. (a) Your quotation should be valid for 90 days from the date of opening of the tender.

   (b) Prices are required to be quoted according to the units indicated in the annexed tender form. When quotations are given in terms of units other than those specified in the tender form, relationship between the two sets of units must be furnished.
6. Preference will be given to those tenders offering supplies from ready stocks and on the basis of FOR destination/ delivery at site.
7. (a) All available technical literature, catalogues and other data in support of the specifications and details of the items should be furnished along with the offer.

   (b) Samples, if called for, should be submitted free of all charges by the tenderer and the Purchaser shall not be responsible for any loss or damage thereof due to any reason whatsoever. In the event of non-acceptance of tender, the tenderer will have to remove the samples at his own expense.

   (c) Approximate net and gross weight of the items offered shall be indicated in your offer. If dimensional details are available the same should also be indicated in your offer.

   (d) Specifications: Stores offered should strictly confirm to our specifications. Deviations, if any, should be clearly indicated by the tenderer in his quotation. The tenderer should also indicate the Make/Type number of the stores offered and provide catalogues, technical literature and samples, wherever necessary, along with the quotations. Test Certificates, wherever necessary, should be forwarded along with supplies. Wherever options have been called for in our specifications, the tenderer should address all such options. Wherever specifically mentioned by us, the tenderer could suggest changes to specifications with appropriate response for the same.
8. The purchaser shall be under no obligation to accept the lowest or any tender and reserves the right of acceptance of the whole or any part of the tender or portions of the quantity offered and the tenderers shall supply the same at the rates quoted.
9. Corrections, if any, must be attested. All amounts shall be indicated both in words as well as in figures. Where there is difference between amount quoted in words and figures, amount quoted in words shall prevail.
10. The tenderer should supply along with his tender, the name of his bankers as well as the latest Income-Tax clearance certificate duly countersigned by the Income-Tax Officer of the Circle concerned under the seal of his office, if required by the Purchaser.
11. The Purchaser reserves the right to place order on the successful tenderer for additional quantity up to 25% of the quantity offered by them at the rates quoted.
12. The authority of the person signing the tender, if called for, should be produced.

II. TERMS & CONDITIONS OF TENDER

1. DEFINITIONS:

(a) The term 'Purchaser' shall mean the President of India or his successors or assigns.

(b) The term 'Contractor' shall mean, the person, firm or company with whom or with which the order for the supply of stores is placed and shall be deemed to include the Contractor's successors, representative, heirs, executors and administrators unless excluded by the Contract.

(c) The term 'Stores' shall mean what the Contractor agrees to supply under the Contract as specified in the Purchase Order including erection of plants & machinery and subsequent testing, should such a condition is included in the Purchase Order.

(d) The term 'Purchase Order' shall mean the communication signed on behalf of the Purchaser by an Officer duly authorised intimating the acceptance on behalf of the Purchaser on the terms and conditions mentioned or referred to in the said communication accepting the tender or offer of the Contractor for supply of stores or plant, machinery or equipment or part thereof.

2. PRICES:

Tender offering firm prices will be preferred. Where a price variation clause is insisted upon by a tenderer, quotation with a reasonable ceiling should be submitted. Such offers should invariably be supported by the base price taken into account at the time of tendering and also the formula for any such variation/s.

3. SECURITY DEPOSIT:

On acceptance of the tender, the Contractor shall, at the option of the Purchaser and within the period specified by him, deposit with him, in cash or in any other form as the Purchaser may determine, security deposit not exceeding ten percent of the value of the Contract as the Purchaser shall specify. If the Contractor is called upon by the Purchaser to deposit, 'Security' and the Contractor fails to provide the security within the period specified, such failure shall constitute a breach of the Contract, and the Purchaser shall be entitled to make other arrangements for the re-purchase of the stores Contracted at the risk of the Contractor in terms of Sub-Clause (ii) and (iii) of clause 10(b) hereof and/or to recover from the Contractor, damages arising from such cancellation.

4. GUARANTEE & REPLACEMENT:

(a) The Contractor shall guarantee that the stores supplied shall comply fully with the specifications laid down, for material, workmanship and performance.

(b) For a period of twelve months after the acceptance of the stores, if any defects are discovered therein or any defects therein found to have developed under proper use, arising from faulty stores design or workmanship, the Contractor shall remedy such defects at his own cost provided he is called upon to do so within a period of 14 months from the date of acceptance thereof by the purchaser who shall state in writing in what respect the stores or any part thereof are faulty.

(c) If, in the opinion of the purchaser, it becomes necessary to replace or renew any defective stores such replacement or renewal shall be made by the Contractor free of all costs to the purchaser, provided the notice informing the Contractor of the defect is given by the purchaser in this regard within the said period of 14 months from the date of acceptance thereof.

(d) Should the Contractor fail to rectify the defects, the purchaser shall have the right to reject or repair or replace at the cost of the Contractor the whole or any portion of the defective stores.

(e) The decision of the purchaser notwithstanding any prior approval or acceptance or inspection thereof on behalf of the purchaser, as to whether or not the stores supplied by the Contractor are defective or any defect has developed within the said period of 12 months or as to whether the nature of the defects requires renewal or replacement, shall be final, conclusive and binding on the Contractor.

(f) To fulfil guarantee conditions outlined in clause 4 (a) to (e) above, the Contractor shall, at the option of the purchaser, furnish a Bank Guarantee (as prescribed by the purchaser) from a Bank approved by the purchaser for an amount equivalent to 10% of the value of the Contract along with first shipment documents. On the performance and completion of the Contract in all respects, the Bank Guarantee will be returned to the Contractor without any interest.

(g) All the replacement stores shall also be guaranteed for a period of 12 months from the date of arrival of the stores at purchaser's site.

(h) Even while the 12 months guarantee applies to all stores, in case where a greater period is called for by our specifications then such a specification shall apply in such cases the period of 14 months referred to in para 4 (b) & (c) shall be the 'asked for' guarantee period plus two months.

5. PACKING, FORWARDING & INSURANCE:

The Contractor will be held responsible for the stores being sufficiently and properly packed for transport by rail, road, sea or air to withstand transit hazards and ensure safe arrival at the destination. The packing and marking of packages shall be done by and at the expense of the Contractor. The purchaser will not pay separately for transit insurance, all risks in transit being exclusively of the Contractor and the Purchaser shall pay only for such stores as are actually received in good condition in accordance with the Contract.

6. **DESPATCH:**

The Contractor is responsible for obtaining a clear receipt from the Transport Authorities specifying the goods despatched. The consignment should be despatched with clear Railway Receipt/Lorry Receipt. If sent in any other mode, it shall be at the risk of the Contractor. Purchaser will take no responsibility for short deliveries or wrong supply of goods when the same are booked on 'said to contain' basis. Purchaser shall pay for only such stores as are actually received by them in accordance with the Contract.

7. **TEST CERTIFICATE:**

Wherever required, test certificates should be sent along with the despatch documents.

8. **ACCEPTANCE OF STORES:**

(a) The stores shall be tendered by the Contractor for inspection at such places as may be specified by the purchaser at the Contractor's own risk, expense and cost.

(b) It is expressly agreed that the acceptance of the stores Contracted for, is subject to final approval by the purchaser, whose decision shall be final.

(c) If, in the opinion of the purchaser, all or any of the stores do not meet the performance or quality requirements specified in the Purchase Order, they may be either rejected or accepted at a price to be fixed by the purchaser and his decision as to rejection and the prices to be fixed shall be final and binding on the Contractor.

(d) If the whole or any part of the stores supplied are rejected in accordance with Clause No. 8 (c) above, the purchaser shall be at liberty, with or without notice to the Contractor, to purchase in the open market at the expense of the Contractor stores meeting the necessary performance and quality Contracted for in place of those rejected, provided that either the purchase, or the agreement to purchase, from another supplier is made within six months from the date of rejection of the stores as aforesaid.

9. **REJECTED STORES:**

Rejected stores will remain at destination at the Contractor's risk and responsibility. If instructions for their disposal are not received from the Contractor within a period of 14 days from the date of receipt of the advice of rejection, the purchaser or his representative has, at his discretion, the right to scrap or sell or consign the rejected stores to Contractor's address at the Contractor's entire risk and expense, freight being payable by the Contractor at actuals.

10. **DELIVERY:**

(a) The time for and the date of delivery of the stores stipulated in the Purchase Order shall be deemed to be the essence of the Contract and delivery must be completed on or before the specified dates.

(b) Should the Contractor fail to deliver the stores or any consignment thereof within the period prescribed for such delivery, the purchaser shall be entitled at his option either.

(i) to recover from the Contractor as agreed liquidated damages and not by way of penalty, a sum of 0.5% per week of the price of any stores which the Contractor has failed to deliver as aforesaid or during which the delivery of such store may be in arrears subject to a maximum of 10%, or

(ii) to purchase from elsewhere, without notice to the Contractor on the account and at the risk of the Contractor, the stores not delivered or others of a similar description (where others exactly complying with the particulars, are not, in the opinion of the purchaser, readily procurable, such opinion being final) without cancelling the Contract in respect of the consignment (s) not yet due for delivery, or

(iii) to cancel the Contract or a portion thereof and if so desired to purchase or authorise the purchase of stores not so delivered or others of a similar description (where others exactly if complying with the particulars are not, in the opinion of the purchaser, readily procurable, such opinion final) at the risk and cost of the Contractor.

In the event of action being taken under sub-clause (ii) & (iii) of clause 10 (b) above, the Contractor shall be liable for any loss which the purchaser may sustain on that account, provided that the re-purchase or if there is an agreement to re-purchase then such agreement is made within six months from the date of such failure. But the Contractor shall not be entitled to any gain on such re-purchase made against default. The manner and method of such re-purchase shall be at the discretion of the purchaser, whose decision shall be final. It shall not be necessary for the purchaser to serve a notice of such re-purchase on the defaulting Contractor. This right shall be without prejudice to the right of the purchaser to recover damages for breach of Contract by the Contractor.

11. **EXTENSION OF TIME:**

As soon as it is apparent that the Contract dates cannot be adhered to, an application shall be sent by the Contractor to the purchaser. If failure, on the part of the Contractor, to deliver the stores in proper time shall have arisen from any cause which the purchaser may admit as reasonable ground for an extension of the time (and his decision shall be final) he may allow such additional time as he considers it to be justified by circumstances, of the case without prejudice to the purchaser's right to recover liquidated damages under clause 10 thereof.

12. **ERECTION OF PLANT & MACHINERY:**

Wherever erection of a plant or machinery is the responsibility of the Contractor as per the terms of the Contract and in case the Contractor fails to carry out the erection as and when called upon to do so within the period specified by the purchaser, the purchaser shall have the right to get the erection done through any source of his

choice. In such an event, the Contractor shall be liable to bear any additional expenditure that the purchaser is liable to incur towards erection. The Contractor shall, however, not be entitled to any gain due to such an action by the purchaser.

13. **PAYMENT:**

Contractor's bill will be passed for payment only after the stores have been received, inspected and accepted by the Purchaser.

14. **MODE OF PAYMENT:**

Normally payment will be made for the accepted stores within 30 days from the date of receipt of the materials.

15. **RECOVERY OF SUM DUE:**

Whenever any claim for the payment of, whether liquidated or not, money arising out of or under this Contract against the Contractor, the purchaser shall be entitled to recover such sum by appropriating in part or whole, the security deposited by the Contractor, if a security is taken against the Contract. In the event of the security being insufficient or if no security has been taken from the Contractor, then the balance or the total sum recoverable as the case may be, shall be deducted from any sum then due or which at any time thereafter may become due to the Contractor under this or any other Contract with the purchaser. Should this sum be not sufficient to cover the full amount recoverable, the Contractor shall pay to the purchaser on demand the remaining balance due. Similarly, if the purchaser has or makes any claim, whether liquidated or not, against the Contractor under any other Contract with the purchaser, the payment of all moneys payable under the Contract to the Contractor including the security deposit shall be withheld till such claims of the purchaser are finally adjudicated upon and paid by the Contractor.

16. **INDEMNITY:**

The Contractor shall warrant and be deemed to have warranted that all stores supplied against this Contract are free and clean of infringement of any Patent, Copyright or Trademark, and shall at all times indemnify the purchaser against all claims which may be made in respect of the stores for infringement of any right protected by Patent Registration of design or Trade mark and shall take all risk of accidents or damage which may cause a failure of the supply from whatever cause arising and the entire responsibility for sufficiency of all means used by him for the fulfillment of the contract.

17. **ARBITRATION:**

In the event of any question, dispute or difference arising under these conditions or any conditions contained in the Purchase Order or in connection with this Contract (except as to any matter the decision of which is specially provided for by these conditions), the same shall be referred to the sole arbitration of the Head of the Purchase office or some other person appointed by him. It will be no objection that the arbitrator is a Government servant, that he had to deal with matter to which the Contract relates or that in the course of his duties as Government servant he has expressed views on all or any other matters in dispute or difference. The award of the arbitrator shall be final and binding on the parties of this Contract.

If the arbitrator be the Head of the Centre/Unit –

(i) In the event of his being transferred or vacating his office by resignation or otherwise, it shall be lawful for his successor-in-office either to proceed with reference himself, or to appoint another person as arbitrator, or

(ii) In the event of his being unwilling or unable to act for any reason, it shall be lawful for the Head of the Centre/Unit to appoint another person as arbitrator.

If the arbitrator be a person appointed by the Head of the Purchase Office – In the event of his dying, neglecting or refusing to act or resigning or being unable to act, for any reason, it shall be lawful for the Head of the Centre/Unit either to proceed with the reference himself or appoint another person as arbitrator in place of the outgoing arbitrator. Subject as aforesaid the Arbitration & Conciliation Act 1996 and the rules there under and any statutory modifications thereof for the time being in force shall be deemed to apply to the arbitration proceedings under this Clause. The Arbitrator shall have the power to extend with the consent of the purchaser and the Contractor the time for making and publishing the award. The venue of arbitration shall be the place as purchaser in his absolute discretion may determine. Work under the Contract shall, if reasonably possible, continue during arbitration proceedings.

In the event of any dispute or difference relating to the interpretation and application for the provisions of the Contracts, such dispute or difference shall be referred by either party to Arbitration of one of the Arbitrations in the Department of Public Enterprises. The Arbitration Act 1996 shall not be applicable to arbitration under this clause. The award of the Arbitrator shall be binding upon the parties to the dispute provided however any party aggrieved by such award may make a further reference for setting aside or revision of the award to the Law Secretary, Department of Legal Affairs. Ministry of Law & Justice, Govt. of India. The parties to the dispute will share equally, the cost of arbitration as intimated by Arbitrator.

18. **COUNTER TERMS AND CONDITION OF SUPPLIERS:**

Where counter terms and conditions printed or cyclostyled conditions have been offered by the supplier, the same shall not be deemed to have been accepted by the Purchaser, unless specific written acceptance thereof is obtained.

19. **SECURITY FOR PURCHASE OF MATERIALS:**

Successful tenderer will have to furnish in the form of a bank guarantee or any other form as called for by the purchaser towards adequate security for the materials and properties provided by the Purchaser for the due execution of the Contract.

◆◆❖◆◆

5. E-Tenders are invited for **Fourier Transform Infrared (FTIR) Spectrometer** listed below. The Bids are to be prepared and submitted in specified Templates online, by logging into the portal https://eprocure.isro.gov.in. Submission of Bids involves two stages to be performed by Vendors – Submission of Bids and Open Authorization. The Bids remain encrypted with the bidders's public key, until the Open Authorization stage. All those Bids where Open Authorization is not given, are automatically disqualified. Such Bids will not be openable and will not be considered for further processing. The Vendors are advised to submit the Bids much before the Closing Time to avoid last minute problems.

E-Procurement No. VSSC/AVN-PUR/2019E1802201 Dt. 20.12.2019 and Print Media Advertisement ref. No. VSSC/P/ADVT/294/2019 Dt. 06.01.2020. E-Tenders are invited for **Fourier Transform Infrared (FTIR) Spectrometer** through our E-procurement site https://eprocure.isro.gov.in. Tender documents can be downloaded **upto 21.02.2020 [14:00 Hrs.], Tender Opening date : 03.03.2020 [14:05 Hrs.].**

Only online tenders will be accepted. No manual / Postal / e-mail / fax offers will be entertained. No manual tender document will be issued. Parties interested to participate in this e-Tender are required to register themselves as vendors, if not already registered, in our e-procurement portal https://eprocure.isro.gov.in by downloading plugins and help demos listed on the home page of the e-procurement link mentioned above to complete the vendor registration process. They can seek help from help desk 080 6780 7786 also as provided in the home page of e-procurement portal in case of any problem for registration and subsequent process. Vendors may please note that without registering in our e-procurement portal, they will not be able to quote for this e-tender.

Important Notice : Tender shall be opened on the first day of the schedule **[ie. 03.03.2020 [14:05 Hrs.]**. If the tender could not be opened on the first day due to any technical snag, it will be opened on the subsequent day as per the schedule. Bidders who are desirous of attending the tender opening may make arrangements for attending the tender opening at their cost.

This is a two part tender, Technical & Commercial part (Part I) and Price Part (Part II) shall be submitted separately. The tenderers should not attach any documents containing Price information along with Technical & Commercial Bid (Part I). We do not open PART II (Price Bid), if PART-I (Technical & Commercial offer) does not meet with our technical specification requirements. Cost split up, other price details etc. shall be uploaded as a separate document under COMMERCIAL DOCUMENTS FROM VENDOR tab.

THE TECHNICAL DOCUMENTS NEED TO BE ATTACHED ONLINE AS A SINGLE PDF FILE WITHOUT ANY PRICE INFORMATION, TECHNICAL BID CONTAINING PRICE DETAILS WILL BE TREATED AS REJECTED.

6. E-Tenders are invited for **Supply of drum pumps for acids and alkalies** listed below. The Bids are to be prepared and submitted in specified Templates online, by logging into the portal https://eprocure.isro.gov.in. Submission of Bids involves two stages to be performed by Vendors – Submission of Bids and Open Authorization. The Bids remain encrypted with the bidders's public key, until the Open Authorization stage. All those Bids where Open Authorization is not given, are automatically disqualified. Such Bids will not be openable and will not be considered for further processing. The Vendors are advised to submit the Bids much before the Closing Time to avoid last minute problems.

E-Procurement No. VSSC/AVN-PUR/2019E1868401 Dt. 16.12.2019 and Print Media Advertisement ref. No. VSSC/P/ADVT/294/2019 Dt. 06.01.2020. E-Tenders are invited for **Supply of drum pumps for acids and alkalies** through our E-procurement site https://eprocure.isro.gov.in. Tender documents can be downloaded **upto 17.01.2020 [11:00 Hrs.], Tender Opening date : 21.01.2020 [11:00 Hrs.].**

Only online tenders will be accepted. No manual / Postal / e-mail / fax offers will be entertained. No manual tender document will be issued. Parties interested to participate in this e-Tender are required to register themselves as vendors, if not already registered, in our e-procurement portal https://eprocure.isro.gov.in by downloading plugins and help demos listed on the home page of the e-procurement link mentioned above to complete the vendor registration process. They can seek help from help desk 080 6780 7786 also as provided in the home page of e-procurement portal in case of any problem for registration and subsequent process. Vendors may please note that without registering in our e-procurement portal, they will not be able to quote for this e-tender.

Important Notice : Tender shall be opened on the first day of the schedule **[ie. 21.01.2020 [11:00 Hrs.]**. If the tender could not be opened on the first day due to any technical snag, it will be opened on the subsequent day as per the schedule. Bidders who are desirous of attending the tender opening may make arrangements for attending the tender opening at their cost.